T405S

Indicator

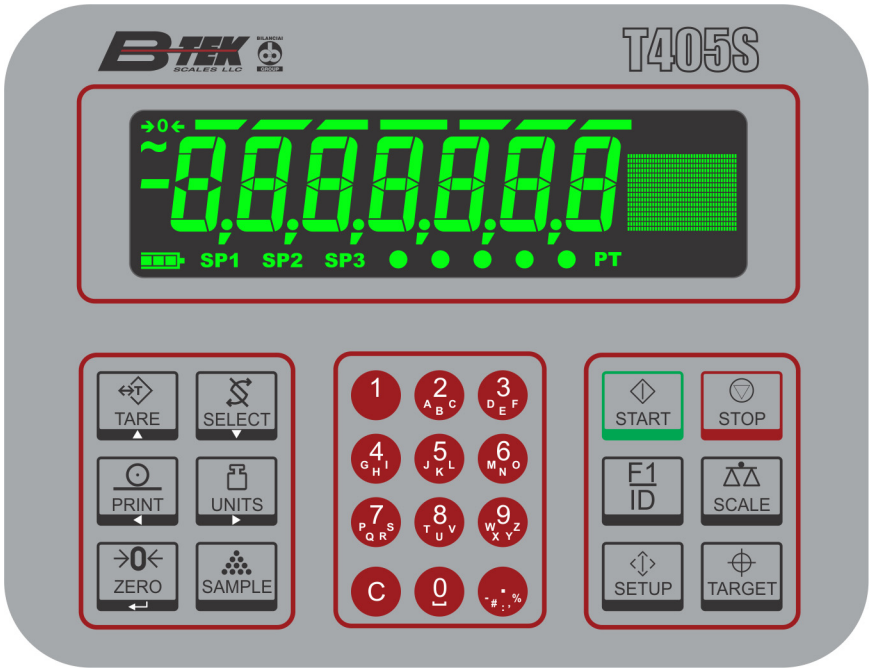

User Instructions

AWT35-501637
Issue AA

© 2016 B-TEK. All rights reserved

Table of Contents

page

Table of Contents 3

Chapter 1 General information and warnings 5
- About this manual 5
  - Text conventions 5
  - Special messages 5
- Installation 5
  - Safe handling of equipment with batteries 6
  - Wet conditions 6
- Routine maintenance 6
- Cleaning the machine 6
- Training 6
- Sharp objects 7
- FCC and EMC declarations of compliance 7

Chapter 2 Introduction 8
- Front panel 9
  - Display 10
- Powering up a T405S indicator 11
- Using the alphanumeric keypad 11
- Entering negative numbers or decimal point 11

Chapter 3 Indicator applications 12
- General weighing application 12
  - SELECT key default function 12
  - Gross weighing 12
  - Net weighing 12
  - Using setpoints 15
  - Printing 15

Chapter 4 Menus 16
- Accessing the menus 16
- Menu annunciators 16
- Exiting the menus 17
- USER level menus 17
- User menu 18
  - Time 18
  - Date 19
  - Site ID 20
  - Seal 20
- About menu 21
  - Boot (Bootloader) 22
  - Firmware 22
  - App 22
  - Serial 22
  - Option 23
  - Enet 23
  - Download 24
  - BSQ 24
- Audit menu 25
  - Counter 25
  - Print 26

Chapter 5 Supervisor menu 27
Creating a new Preset Tare 28
Editing an existing Preset Tare 28
Printing the Preset Tare list 28
Resetting the Preset Tare list 29
Printed Preset Tare report example 29

Chapter 6 Communications 30
Default print formats 30

Chapter 7 Error messages 31

1 General information and warnings

1.1 About this manual

This manual is divided into chapters by the chapter number and the large text at the top of a page. Subsections are labeled as shown by the 1.1 and 1.1.1 headings. The names of the chapter and the next subsection level appear at the top of alternating pages of the manual to remind you of where you are in the manual. The manual name and page numbers appear at the bottom of the pages.

1.1.1 Text conventions

Key names are shown in **bold** and reflect the case of the key being described. If a key has a dual function it may be referred to by its alternate function.

Displayed messages appear in ***bold italic*** type and reflect the case of the displayed message.

Annunciator names appear as *italic* text and reflect the case of the annunciator.

1.1.2 Special messages

Examples of special messages you will see in this manual are defined below. The signal words have specific meanings to alert you to additional information or the relative level of hazard.



CAUTION!
This is a Caution symbol.
Cautions give information about procedures that, if not observed, could result in damage to equipment or corruption to and loss of data.



NOTE: This is a Note symbol. Notes give additional and important information, hints and tips that help you to use your product.

1.2 Installation



NO USER SERVICEABLE PARTS. REFER TO QUALIFIED SERVICE PERSONNEL FOR SERVICE.

1.2.1 Safe handling of equipment with batteries

CAUTION: Danger of explosion if battery is incorrectly replaced. Replace only with the same or equivalent type recommended by the manufacturer. Dispose of used batteries according to the manufacturer's instructions.

1.2.2 Wet conditions

Under wet conditions, the plug must be connected to the final branch circuit via an appropriate socket / receptacle designed for washdown use.

Installations within the USA should use a cover that meets NEMA 3R specifications as required by the National Electrical Code under section 410-57. This allows the unit to be plugged in with a rain tight cover fitted over the plug.

1.3 Routine maintenance

IMPORTANT: This equipment must be routinely checked for proper operation and calibration.
Application and usage will determine the frequency of calibration required for safe operation.

Always isolate the indicator from the power supply before starting any routine maintenance to avoid the possibility of electric shock.

1.4 Cleaning the machine

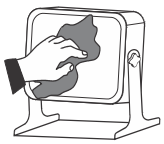

Table 1.1 Cleaning DOs and DON'Ts

DO	DO NOT
Wipe down the outside of standard products with a clean cloth, moistened with water and a small amount of mild detergent	Attempt to clean the inside of the machine
	Use harsh abrasives, solvents, scouring cleaners or alkaline cleaning solutions
Spray the cloth when using a proprietary cleaning fluid	Spray any liquid directly on to the display windows

1.5 Training

Do not attempt to operate or complete any procedure on a machine unless you have received the appropriate training or read the instruction books.

To avoid the risk of RSI (Repetitive Strain Injury), place the machine on a surface which is ergonomically satisfactory to the user. Take frequent breaks during prolonged usage.

1.6 Sharp objects

Do not use sharp objects such as screwdrivers or long fingernails to operate the keys.

1.7 FCC and EMC declarations of compliance

United States

This equipment has been tested and found to comply with the limits for a Class A digital device, pursuant to Part 15 of the FCC Rules. These limits are designed to provide reasonable protection against harmful interference when the equipment is operated in a commercial environment. This equipment generates, uses, and can radiate radio frequency energy and, if not installed and used in accordance with the instruction manual, may cause harmful interference to radio communications. Operation of this equipment in a residential area is likely to cause harmful interference in which case the user will be required to correct the interference at his own expense.

2 Introduction

The T405S indicator, shown in Figure 2.1, is a high performance, multi-function programmable indicator. They can display, analyze, store, and transmit data across a range of technology methods.

These indicators are suitable for the office, dusty, wet or high pressure and heavy washdown environments. They come in IP69K stainless steel desktop and IP66 panel mount housings. They have IBN displays for high contrast and a graphic array to display text and graphic messages appropriate to the function of the program.

The T405S indicator will support up to two scales with a maximum total of 16 - 350 ohm load cells. The standard indicator can connect to a single analog scale, an analog and digital scale or two digital scales. The indicators require 100 VAC - 240 VAC, 50 or 60 Hz or 12-36VDC. The standard indicator connectivity includes a USB Host, two serial ports and an Ethernet port.

With an option card they can support 2 analog scale inputs. Available options include:

- Analog Output
- Current Loop/RS485/RS422
- DeviceNet™
- Profibus
- USB Device
- Wireless 802.11g
- Internal 120 VAC relay
- 2nd Scale Input 5VDC Excitation
- 2nd Scale Input 10 VDC
- External I/O Interface
- AC input, 4 Inputs (120-240VAC)
- DC input, 4 inputs(4-30VDC)
- AC output, 4 relays (20-240VAC)
- DC output, 4 relays (3-60VDC)

The indicator also has three logic level inputs with configurable functions and three setpoint outputs. See the Specification literature for a full list of specifications.

2.1 Front panel

The front panels, shown in Figure 2.1, consists of the keys and displays.

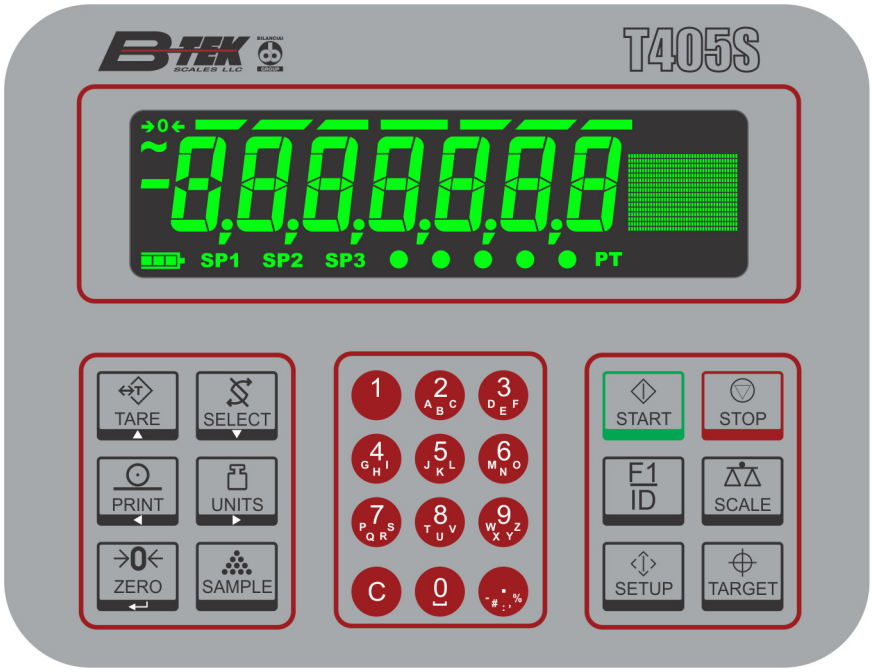

Figure 2.1 Front panel of theT405S indicator

Never press a key with anything but your finger. Damage to the overlay may result if sharp or rough objects are used.

The normal function of the keys on the front panel of the T405S are listed below.

TARE	Press the **TARE** key for pushbutton, key entry or preset Tare functions. Acts as an up arrow key for menu navigation. Allows entry of numeric values.
SELECT	Press the **SELECT** key to toggle between the active display values. Press and hold to enter the setpoint editor. Acts as a down arrow key for menu navigation. Allows entry of numeric values.
PRINT	Press the **PRINT** key to send information to a peripheral device through a configured communications port. Acts as a left arrow key for menu navigation and removes last digit during numeric entry.
UNITS	Press the **UNITS** key to scroll through the available units of measure while in normal operating mode. Acts as a right arrow key for menu navigation and inserts new digit during numeric entry.
ZERO	Press the **ZERO** key to zero the display. Acts as an ENTER key to accept a displayed value or function.

SAMPLE	The **SAMPLE** key can be used to perform custom application functions.
START	The **START** key can be used to perform custom application functions.
STOP	The **STOP** key can be used to perform custom application functions.
F1 ID	The **F1/ID** key can be used to perform custom application functions. It can also be used to abort a numeric entry and it acts as an ESCAPE key in the menu navigation.
SCALE	The **SCALE** key can be used to perform custom application functions. It can also be used to select the active scale when more than one scale is enabled.
SETUP	The **SETUP** key can be used to perform custom application functions. It can also be used to view the password entry screen for menu access.
TARGET	The **TARGET** key can be used to perform custom application functions.
1 2 3 4 5 6 7 8 9 C 0 .	Use the numeric keypad to enter numbers in the appropriate screens. Press the **C** (CLEAR) key to clear the last entry.

2.1.1 Display

The display and annunciators are shown and labeled in Figure 2.2.

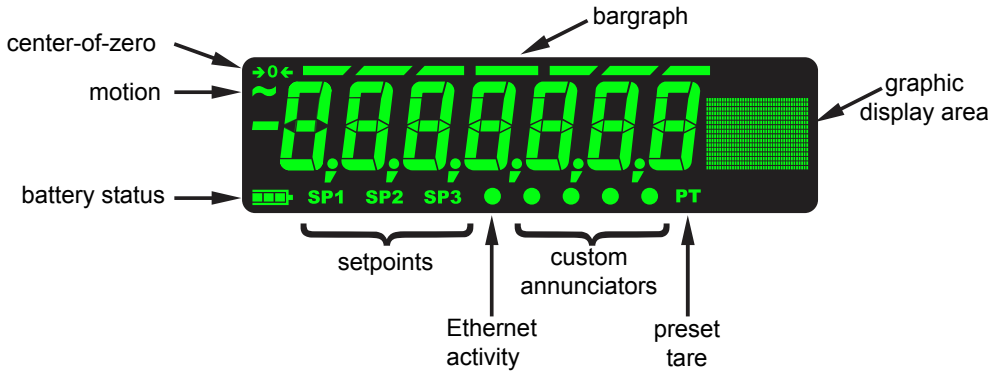

Figure 2.2 Annunciators

These annunciators will light during operation to inform the user of the weighing mode, active unit of measure, etc.

2.2 Powering up a T405S indicator

The indicator is always active as long as power is received. Power can be supplied by:

- AC power cord connected to a properly grounded outlet (100 VAC - 240 VAC, 50 or 60 Hz)
- External 12VDC @ 1.2 Amps up to 36VDC @400mA (14.4 Watts). These are the power requirements for a fully loaded unit (16 x 350 load cell, 500mA out the 5V COM port terminal block, 500mA load on USB Host, and Wireless option card installed).
- AC to 24VDC power converter (optional accessory for panel mount version)

2.3 Using the alphanumeric keypad

Use the alphanumeric keypad to enter numbers and words when prompted by the indicator. The action is similar to using a cell phone to select the number or letter. A rapid succession of presses will scroll through the number on the key and then the letters, starting with upper case and then lower case. The decimal key scrolls through the negative sign, pound sign, colon, comma and percent sign. The **0** key toggles between 0 and a space.

2.4 Entering negative numbers or decimal point

To enter a minus sign for a negative number or a decimal point (or comma), press the **C** key (or **PRINT** key) to clear the current value from the display.

Then to enter a negative number, with a single ***0*** displayed press **SELECT**. The first character will then change to a (-) negative sign. Enter the rest of the digits normally.

To enter a decimal point (or comma) use the decimal point key.

3 Indicator applications

The T405S indicator comes standard with a basic weighing application and 50 Preset Tare/ID memory. Custom applications can be written in LUA programming language or by installing Macro programs.

3.1 General weighing application

3.1.1 SELECT key default function

In the General Weighing application you can view the gross, net and tare display values or other scale parameters by repeatedly pressing **SELECT**.

3.1.2 Gross weighing



To change unit of measure, press **UNITS**.

To perform gross weighing, power up the unit and follow these steps:

1. Empty the scale and, if necessary, press **ZERO** to zero the display …

   0 is displayed and the *center-of-zero* annunciator lights.

2. Place item to be weighed on the scale …

   Weight is displayed.

3. Repeat steps 1 and 2.

3.1.3 Net weighing

Net weighing is available via three types of tare entry.

Pushbutton tare	When enabled press **TARE** to tare the weight on the scale.
Entered tare	When enabled key in a tare weight and press **TARE** to set..
Preset tare	When enabled press **TARE** and then enter a stored Preset Tare ID (up to 4 alphanumeric digits) and press **ZERO** to set.



Pushbutton and Entered Tares can be enabled simultaneously. If Preset Tare is enabled, Pushbutton and Entered Tares are automatically disabled.

Auto Tare Clear

If auto tare clear is enabled, after a weighment, when the weight falls into the gross zero band, tare is cleared to zero.



Definition: Gross zero band - this is a configured value that defines a window around gross zero. This is used in several ways in different applications.

The three types of tare are explained below.

Using Pushbutton Tare

To perform a net weighment using pushbutton tare, power up the unit and follow these steps:

1. With no weight on the scale, if the display does not read ***0*** press **ZERO** …

   0 is displayed and the *center-of-zero* annunciator lights.

2. Place item to be tared on the scale …

   Weight is displayed.

3. Press **TARE** …

   0 is displayed and the *NET* weight is displayed.

4. Place material to be weighed into or on the tared item on the scale …

   Net weight of material is displayed.

5. Repeatedly press **SELECT** to view the gross, tare, and net values.

6. If repeated weighments use the same tared item, you do not need to establish a new tare value as described in step 2 and 3.



*Pressing **TARE** will perform the tare function but if you continue to press and hold **TARE** for 3 seconds the display will show **cLEArEd** and the Tare weight is cleared.*



*If gross weight is not at 0, press the **ZERO** key; then press the **TARE** key to clear the tare value.*

Using Entered Tare

To perform a net weighment using entered tare, the following steps describe a typical operation:

1. With no weight on the scale, if the display does not read ***0*** press **ZERO** …

   0 is displayed and the *center-of-zer*o annunciator lights.

2. Key in the tare value of the container or box that will be used to hold the material that requires a net weight value, and press **TARE** …

   Tare weight is displayed as a negative value and the *NET* weight is display and the PT annunciator lights.

3. Place the container or box and material to be weighed on the scale …

   Net weight of material is displayed.

4. If repeated weighments use the same tared item, you do not need to establish a new tare value as described in step 2.

5. To remove the tare weight from the scale, enter ***0***, then press **TARE** …

   The tare is cleared and the scale is in gross weigh mode.



*Press and hold **TARE** for 3 seconds and the display will show **cLEArEd** and the Tare weight is cleared.*

Using Preset Tare

Preset tares are entered in a password protected menu. Refer to details described in the *Supervisor menu on page 27*. There can be up to 50 tare values stored in memory referenced by a 4 digit ID. To perform a net weighment using one of the preset tares, follow these steps:

1. With no weight on the scale, if the display does not read ***0*** press **ZERO** …

   0 is displayed and the *center-of-zero* annunciator lights.

2. Press **TARE** …

   EntEr is displayed.

3. Key in the desired preset tare ID and press **ZERO** …

   Tare weight is displayed as a negative value and the net weight is displayed and the PT annunciator lights.

4. Place container or box and material to be weighed on the scale …

   Net weight of material is displayed.

Step 4 can be done prior to step 2 if desired.



When the item is removed from the scale the Tare is cleared automatically if Auto Tare Clear is enabled. To remove the tare weight manually, select a preset tare ID that has a value of 0 for the tare.



If the active unit of measure is lb-oz then tare weights must be entered in the oz equivalent. To enter 2 lb 4.5 oz you would need to enter 36.5 oz (2 lb = 32 oz plus the 4.5)

3.1.4 Using setpoints

Setpoints are values (weight) at which outputs are triggered automatically. Outputs can control relays connected to valves, lights, other machinery, or used in applications for status or conditional settings to impact the way the indicator operates. Setpoint outputs can be configured in the Ztools configurator program.

The default application is configured for the three onboard Outputs to Activate Above a Gross Weight Value. Hold the SELECT key to access the setpoint editor.

The three onboard inputs are setup for:

- 1 = Zero
- 2 = Tare
- 3 = Print

3.1.5 Printing

What is printed is typically controlled by the custom application program. The default application program will print the gross, tare and net weight on serial port 1 when you press **PRINT**.

Printing any of the configured print formats is possible using the Numbered Print feature. Enter the print format number and then press the **PRINT** key. The selected print format will be transmitted out all ports that are configured to print.

4 Menus

Password protected menus are available to configure the indicator and/or view information.

4.1 Accessing the menus

Follow these steps to access the menus in the T405S series.

1. With the indicator powered up and in normal operating mode, press and hold **SETUP** …

   Pass is displayed, prompting you to enter the password.

2. Key in the password for the menu you want and press the **ZERO** key …

   The first item in the top level of the menu you accessed is displayed.

3. Use the navigation keys, shown below, to navigate through the menu structure. The symbols in the chart appear on the bottom of the keys.

Press **SELECT**/ ▼ to move down in a menu
Press **TARE**/ ▲ to move up in a menu, except at the bottom item in a menu, then use **ZERO**/ ↵ or **F1**
Press **PRINT**/ ◀ to move left in a menu
Press **UNITS**/ ▶ to move right in a menu
Press **ZERO**/ ↵ to accept a value or choice and move up in the menu.
Press **F1** to escape and move up in the menu

4.2 Menu annunciators

The menu structure is made up of menu items, parameters, value entry screens and lists from which you choose one item. To help you know where you are in the menu, the bargraph at the top of the display is on while the indicator is in the menus and will change appearance according to the following rules:

All segments flashing	This means you are in the menu structure but not in any of the following screens.
Center flashing / others solid	This means you are in a parameter prompt screen.
Center flashing / others off	This means you are in a numeric entry screen. Enter a number and press **ZERO** to accept.
Right flashing / others off	This means you are in a list. Scroll through the choices with the **PRINT** and **UNITS** keys and press **ZERO** to accept.

4.3 Exiting the menus

1. If you are at the bottom item in a menu use **ZERO** to accept a choice or value and move up a level, or use **SETUP** to escape and move up one level without accepting the choice or value. From that point, press **TARE** repeatedly until …

   SAVE no is displayed. This means "Do not save changes."

2. Press **UNITS** to scroll through the choices: ***SAVE no***, ***SAVEYES*** and ***CAnCEL***. Press **ZERO** to accept the displayed choice.

   If you choose ***SAVE no*** or ***SAVEYES*** the indicator exits the menu and returns to normal weighing mode.

   OR

If you choose ***CAnCEL***, the indicator remains in the menu.

4.4 USER level menus

The USER level menus are available to the user. The other menu levels are for supervisors and technicians only.

The USER level (password 111) contains the User, About, and Audit menus arranged as shown in Figure 4.1.



Figure 4.1 USER level (password 111) menus

To access the USER level, from normal weighing mode, press and hold the **F1** key. Enter password 111 and press the **ZERO** key.

4.5 User menu

The User menu is shown in Figure 4.2.

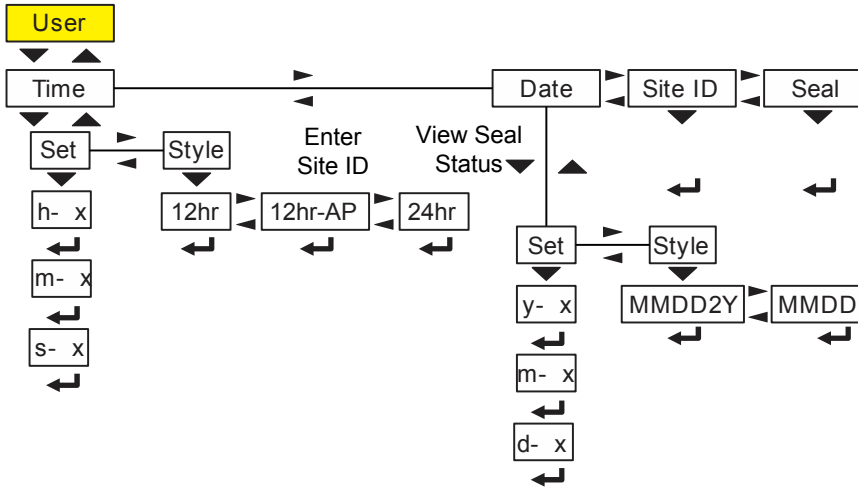

Figure 4.2 User menu

Use this menu to set the time and date, to enter a site ID, and view the physical seal status. Each is explained below:

4.5.1 Time

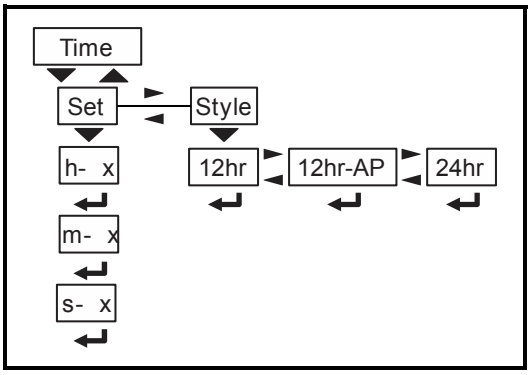

Use the ***tiME*** menu item to set the clock (***SEt***) and to choose the style of the time display (***StYLE***) 12 hr, 12 hr AM/PM or 24 hr.



The Time and Date can be used in print formats.

SEt Use this to enter values for the time.
h- ***x***, = Hour
m- ***x*** = Minute
s- ***x*** = Seconds

StYLE Choose the style of the time display. Choices are:
12hr, = 12 hour clock
12hr-AP = 12 hour clock with AM/PM
24hr = 24 hour military time

4.5.2 Date

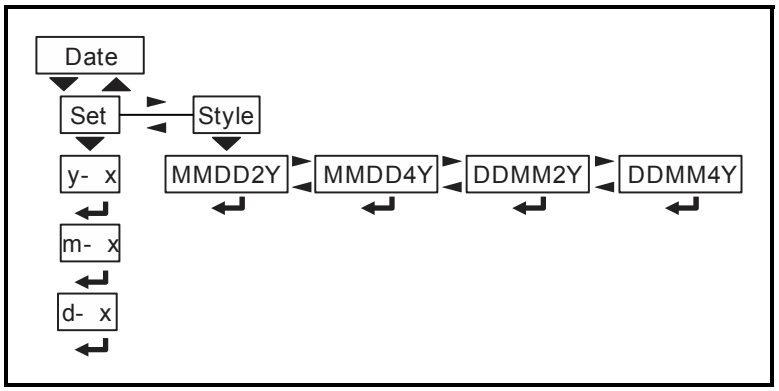

Use the ***dAtE*** item to set the year, month and day and the style of the displayed date.

SEt Enter values for the date.
y- ***x*** = Year
m- ***x*** = Month
d- ***x*** = Day

StYLE Choose the style of the date display. Choices are:
MMdd2Y = Month, Day, 2-digit Year
MMdd4Y = Month, Day, 4-digit Year
ddMM2Y = Day, Month, 2-digit Year
ddMM4Y = Day, Month, 4-digit Year

4.5.3 Site ID

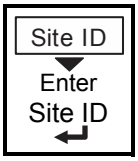

SitE Use this to enter a Site ID. Enter up to 6 characters for the Site ID via the alphanumeric entry. See page 14.

The Site ID can be used in a print format. Valid entries are decimal 32 through 126 (ASCII space to the ~ character)

4.5.4 Seal

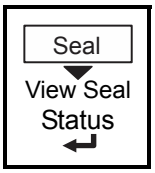

SEAL Use this to view the seal status of the indicator.

This is the status of the physical seal jumper inside the indicator. If the unit is sealed, no changes can be made to the configuration of the indicator.

To exit the menu, see *Exiting the menus on page 17*.

4.6 About menu

The About menu is shown in Figure 4.3.

Reference *Using the alphanumeric keypad on page 11*

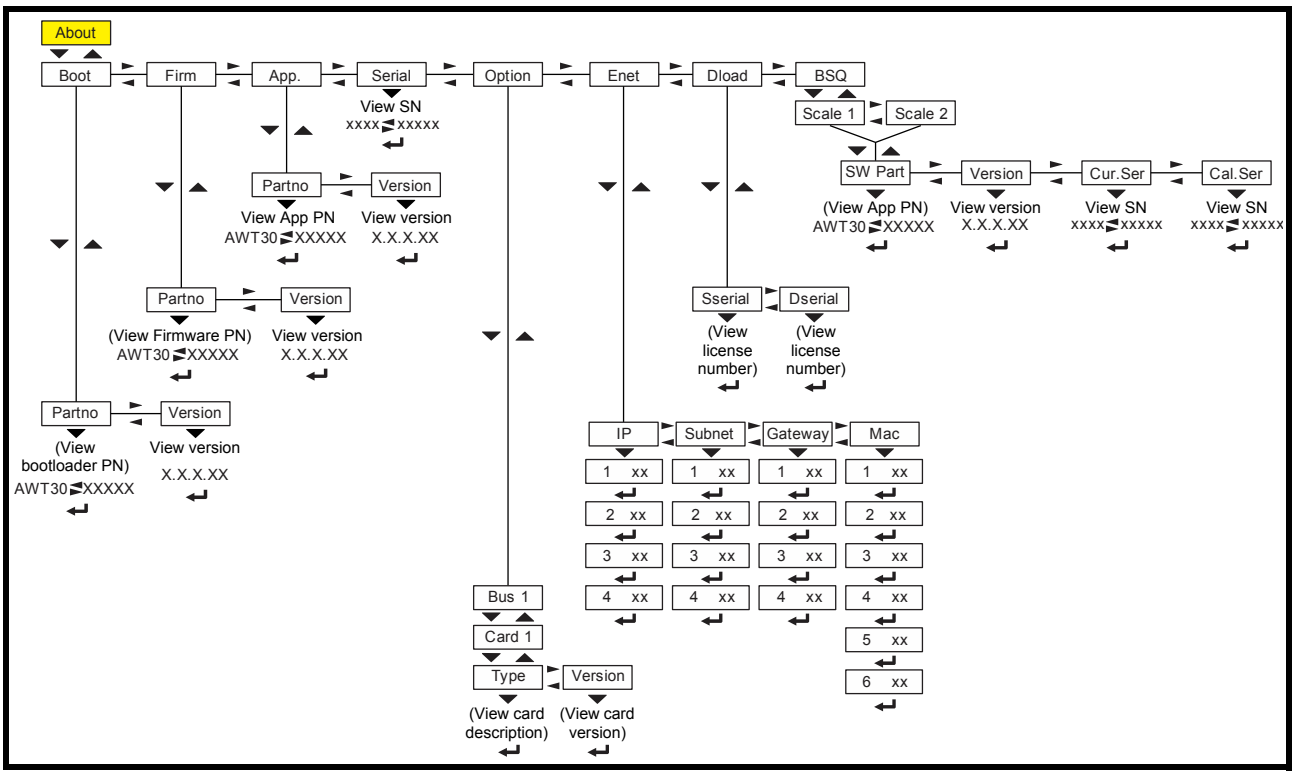

Figure 4.3 About menu

Use this menu to display information about the various items shown in Figure 4.3. Each is explained below:

Definitions:

Bootloader	*Software that makes the electronics run.*
Firmware	*Embedded system software that creates core functions of the product.*
App	*Specific software that controls the behaviour for a given installation.*

4.6.1 Boot (Bootloader)

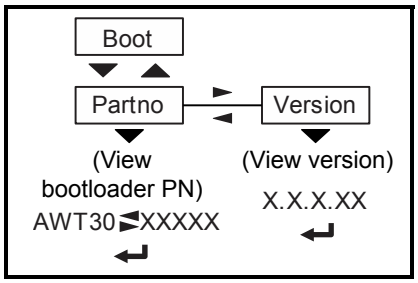

PArtno Use this to view the bootloader part number. The part number is displayed in two parts. Press **RIGHT arrow** key or **LEFT arrow** key to toggle the display between the first and second parts of the part number.

VErSion Use this to view the version of the bootloader.

4.6.2 Firmware

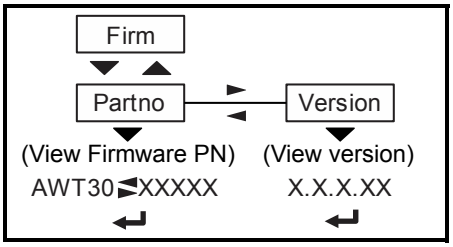

PArtno Use this to view the firmware part number. The part number is displayed in two parts. Press **RIGHT arrow** key or **LEFT arrow** key to toggle the display between the first and second parts of the part number.

VErSion Use this to view the version of the firmware.

4.6.3 App

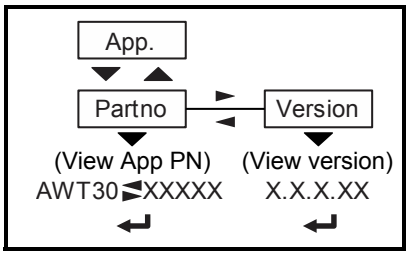

PArtno Use this to view the App part number. The part number is displayed in two parts. Press **RIGHT arrow** key or **LEFT arrow** key to toggle the display between the first and second parts of the part number.

VErSion Use this to view the version of the App.

4.6.4 Serial

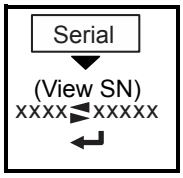

SEriAL Use this to view the Serial Number of the indicator. The number is displayed in two parts. Press **RIGHT arrow** key or **LEFT arrow** key to toggle the display between the first and second parts of the serial number.

4.6.5 Option

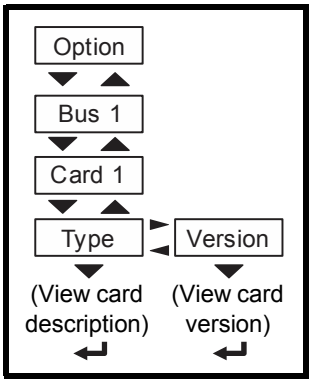

Bus 1 There is only 1 Bus in the T405S.

Card 1 There is only 1 Card in the T405S.

oPtion Use this to view the description and version of an installed option card.

4.6.6 Enet

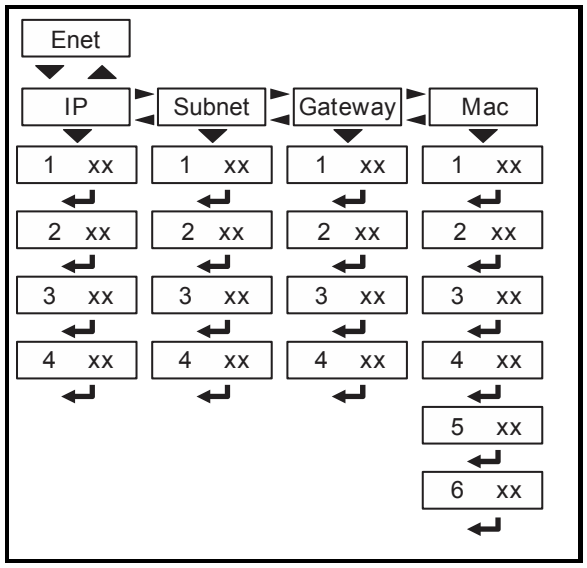

EnEt This stands for Ethernet. Use this to view the network addresses.

If the indicator is connected to an Ethernet network, the values displayed will be the current assigned addresses.

iP Use this to view the IP address.

SubnEt Use this to view the Subnet address.

gAtEWAY Use this to view the Gateway address.

MAc Use this to view the Mac address.

The IP, Subnet and Gateway addresses are a series of four double digit values. The MAC address is a series of six double digit values: 1 XX, 2 XX, 3 XX, etc.

4.6.7 Download

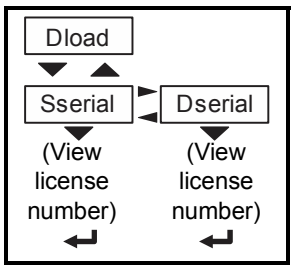

dLoAd This stands for download. Use this to view these items:

- ***SSEriAL*** View the license number that created the configuration file.
- ***dSEriAL*** View the license number that downloaded the configuration file.

This is used for security and licensing purposes.

4.6.8 BSQ

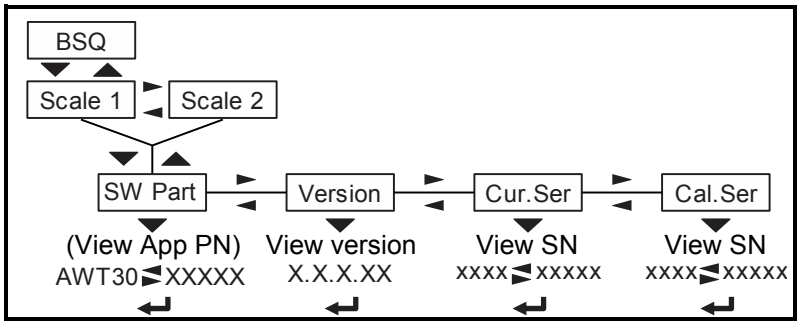

This stands for Bench Scale - Quartzell.

SW PArt View the firmware part number of the cell that is connected.

VErSion View the firmware version of the cell that is connected.

cur.SEr View the serial number of the cell that is connected.

cAL.SEr View the serial number of the cell that **WAS** connected at the time of calibration.

To exit the menu, see *Exiting the menus on page 17*.

4.7 Audit menu

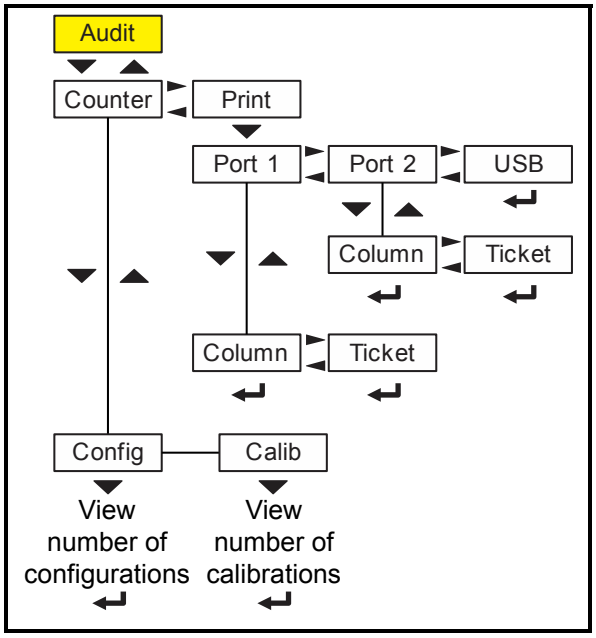

Figure 4.4 Audit menu

Use this menu to display audit counters for configuration and calibration and to print the information. Each is explained below:

4.7.1 Counter

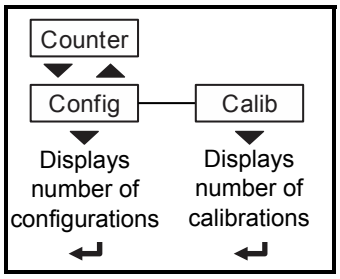

countEr Use this to view these items:

conFig View how many times the indicator has been configured.

cALib View how many times the indicator has been calibrated.

4.7.2 Print

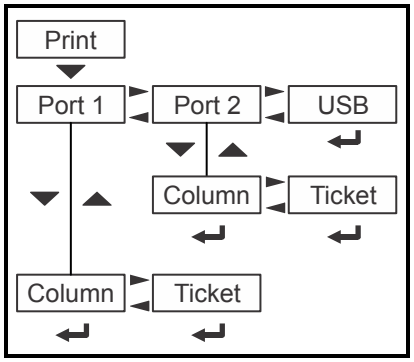

Print Use these to select which port to print the audit report through. Choices are:

- ***Port 1*** Under ***Port 1*** choose to print to a column or ticket printer.
- ***Port 2*** Under ***Port 2*** choose to print to a column or ticket printer.
- ***uSb*** Printing to USB requires that a USB flash drive is connected to the indicator host USB. Printing to USB will create a folder on the flash drive and a comma separated file with the data.

To exit the menu, see *Exiting the menus on page 17*.

5 Supervisor menu

The Supervisor menu allows the setup and editing of the Preset Tare register in the T405S. This menu only applies to the default standard application of the T405S indicator.

To access the Supervisor menu requires entry of the Supervisor password. Refer to the Service manual for details. The T405S has a Preset Tare register memory which can store 50 tares, each identified by a 4 digit alphanumeric Tare ID. Preset Tare must be enabled for these settings to function.

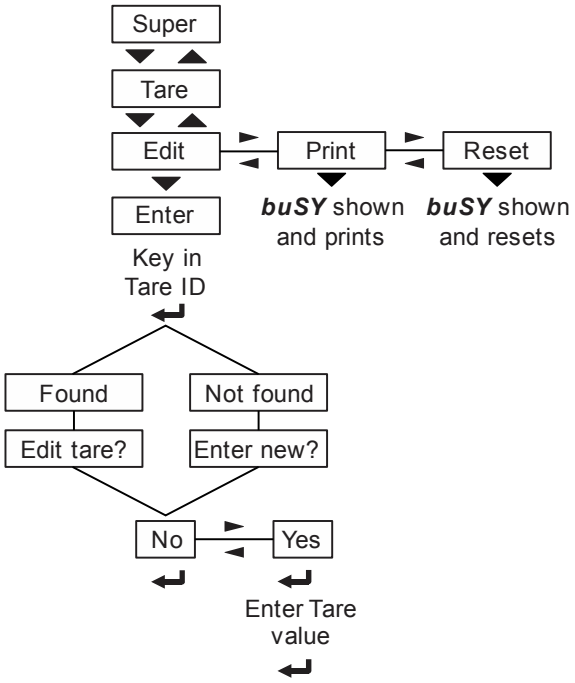

Figure 5.1 Supervisor menu

Enter the Supervisor password. Follow the keypresses illustrated in Figure 5.1 and see the definitions of each item below to enter, print or reset the 50 available Preset Tares, which include the ID number and the tare weight.

SuPEr This is the top item in the Supervisor menu.

tArE This is the only item to appear in the Supervisor menu. Use this to manage the Preset Tares.

- ***Edit*** Use this to find an existing tare or create a new one
- ***Print*** Use this to print the tare list. See *Printed Preset Tare report example on page 29*.
- ***rESEt*** Use this to clear all tares in memory.

For step by step instructions see the following sections.

5.1 Creating a new Preset Tare

1. From ***Edit*** press **SELECT** …

   EntEr is displayed. A cursor appears in the graphic display box on the right side of the display.

2. Enter up to 4 alphanumeric digits for the Preset Tare ID. The digits will appear in the graphic display. Press **ZERO** to accept …

   Since this is a new Preset Tare the display will quickly scroll through these messages: ***not Found*** and then ***EntEr nEW?*** followed by ***no***.

3. Press **UNITS** …

   YES is displayed.

4. Press **ZERO** …

   A flashing ***0*** is displayed and the instruction ***Enter Tare*** appears in the graphic display.

5. Key in the Preset Tare weight and press **ZERO** to accept …

   The display returns to the ***Edit*** menu item. The Preset Tare is now in memory and can be recalled.

5.2 Editing an existing Preset Tare

1. From ***Edit*** press **SELECT** …

   EntEr is displayed. A cursor appears in the graphic display box on the right side of the display.

2. Enter the Preset Tare ID number. The digits will appear in the graphic display. Press **ZERO** to accept …

   Since this is an existing Preset Tare the display will quickly scroll through these messages: ***Found*** and then ***Edit tArE?*** followed by ***no***.

3. Press **UNITS** …

   YES is displayed.

4. Press **ZERO** …

   A flashing display of the current tare value is displayed and the instruction ***Enter Tare*** appears in the graphic display.

5. Key in the new Preset Tare weight and press **ZERO** to accept …

   The display returns to the ***Edit*** menu item. The new Preset Tare value is now in memory and can be recalled.

5.3 Printing the Preset Tare list

1. From ***Edit*** press **UNITS** …

   Print is displayed.

2. Press **SELECT** …

   bUSY is briefly displayed as the Preset Tare report is printed. See *Printed Preset Tare report example on page 29*. The display returns to the ***Print*** menu item.

5.4 Resetting the Preset Tare list

1. From ***Edit*** press **UNITS** twice …

   rESEt is displayed.

2. Press **SELECT** to reset the Preset Tare memory to factory defaults …

   bUSY is briefly displayed as the Preset Tare memory is cleared and then the display returns to the ***rESEt*** menu item.



If the Preset Tare list has been reset and you print the Preset Tare report the 50 memory channels will be listed but the Tare Name and Tare Value will each be 0.

5.5 Printed Preset Tare report example

```
List of Preset Tares
-----------------------------------------------
    Tare Name:Tare Value:
1      12AB       10
2      23BC       20
3      34CD       30
4      45DE       40
5      56EF       50
6      67FG       60
7      78GH       70
8      89HI       80
9      90IJ       90
10     123A       100
11     234B       110
12     345C       120
13     456D       130
14     567E       140
15     678F       150
16     789G       160
17     890H       170
18     ABCD       180
19     BCDE       190
20     CDEF       200
21     1234       210
22     2345       220
23     3456       230
24     4567       240
25     5678       250
26     6789       260
27     7890       270
28     ABCD       280
29     BCDE       290
```

Etc. to 50

```
Tare List Complete
```

6 Communications

The T405S can communicate through these ports:

- Serial (2)
- Ethernet
- USB-Host (transactions to USB memory stick or compatible USB printer)
- Option Cards
  - USB-Device
  - Wireless 802.11g
  - RS485/20ma current loop

6.1 Default print formats

Below are examples of the default formats that are available:

General Weighing (Format #1)

```
  Gross  272.04 lb
   Tare   95.88 lb
    Net  176.16 lb
```

Active value (G, T or N) and displayed weight (Format #5)

```
G  272.04 lb
```

Displayed weight and active value (G, T or N) (Format #7)

```
272.04 lb G
```

The indicator can be configured for many other outputs to match the application.

7 Error messages

The following error messages may be displayed during use of the indicator:

Message	Display
Overload	
Can't fit on display	
Underload	
Can't	
Entry not in valid range	
Password entry failed	
Indicator did not reach a stable zero weight within time window set for automated weighing process.	  



B-TEK Scale LLC
1510 Metric Ave. SW
Canton, OH 44706-3088