BILANCIAI GROUP

BTEK SCALES LLC

1.800.266.8900 WWW.B-TEK.COM

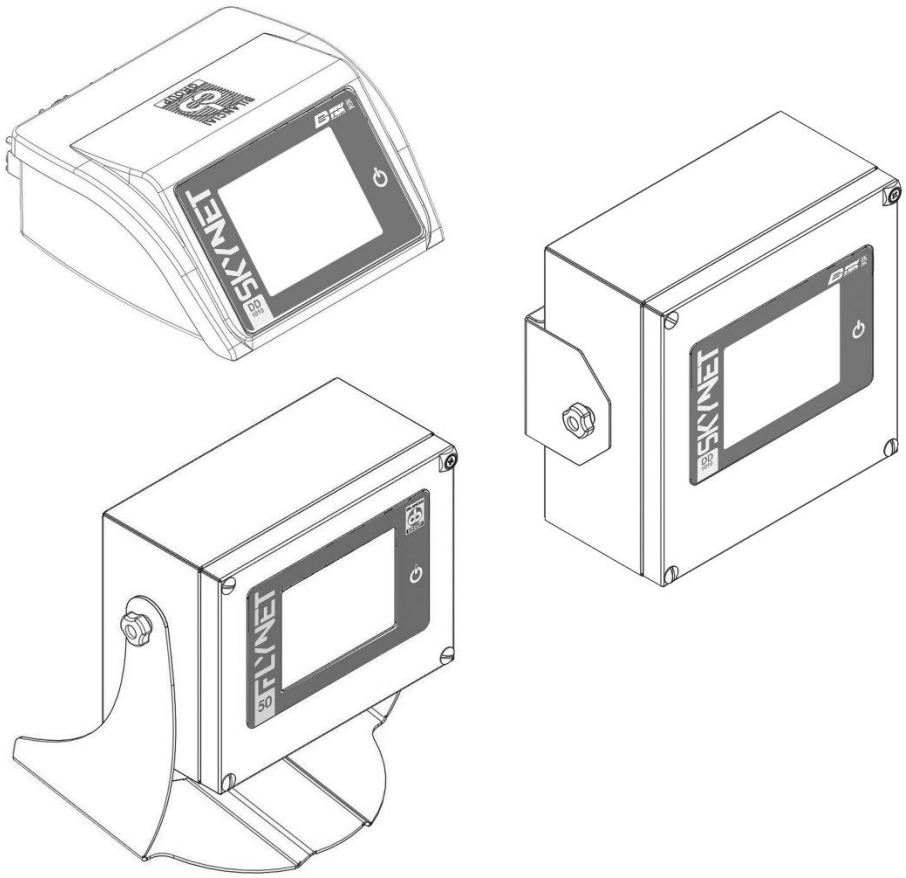

WEIGHING INDICATOR
DD1010 SKYNET
USE, MAINTENANCE AND INSTALLATION MANUAL

Edition 03/09/2020

Manual code 81320560

CONTENTS

1 INTRODUCTION 4

1.1 FOREWORD 4
1.2 DOCUMENTATION 5
1.3 SYMBOLS 5
1.4 GLOSSARY OF TERMS USED 6
1.5 DESCRIPTION OF THE INDICATOR 8
1.6 KEY 8
1.7 TECHNICAL CHARACTERISTICS OF THE INDICATOR 9
1.8 DECLARATION OF CONFORMITY 10
1.9 INDICATOR OVERALL DIMENSIONS AND WEIGHT 10
1.9.1 Plastic version 10
1.9.2 Tabletop stainless steel version 11
1.9.3 Wall-mounted stainless steel version 11
1.10 INSTRUCTIONS FOR DISPOSAL OF ELECTRICAL OR ELECTRONIC WASTE 12
1.11 INSTRUCTIONS FOR TECHNICAL SERVICE REQUEST 12
1.12 WARRANTY 13
1.13 SPARE PARTS 14

2 SAFETY REQUIREMENTS 16

2.1 NOT ALLOWED USES 16
2.2 REGULATIONS 16
2.3 CONDITIONS OF USE 16

3 DELIVERY AND INSTALLATION 17

3.1 INSTALLATION 19
3.1.1 Tabletop installation 19
3.2 CONNECTING THE INDICATOR TO THE MAINS 19
3.2.1 Checks 19
3.2.2 Wiring diagram (version with connectors) 20
3.2.3 Wiring diagram (version with cable glands) 21
3.3 CONNECTING THE INDICATOR TO THE WEIGHING PLATFORM 23
3.3.1 Wiring diagram (with platform) 24
3.3.2 Equipotential between indicator and weighing platform 24
3.3.3 Digital Scale serial connection 25
3.3.4 Analogue Scale serial connection 25
3.4 SERIAL CONNECTIONS 26
3.4.1 COM4 serial connection 26
3.4.2 COM6/7 serial connection 26
3.4.3 COM8/9 serial connection (optional) 27
3.4.4 RS232 connections 27
3.4.5 RS422 connections 27
3.5 INPUT/OUTPUT CONNECTION 28
3.5.1 Input connection 30
3.5.2 Output connection 30

4 CONTROLS, SWITCHING ON AND OFF 31

4.1 ON/OFF KEY 31
4.2 TOUCH SCREEN 33
4.3 EXTERNAL KEYBOARD AND MOUSE 33

5 USING THE INDICATOR 34

5.1 INDICATOR CONFIGURATION 34
5.1.1 Application 34
5.2 SYSTEM 35
5.2.1 Metrology Management 35
5.2.1.1 Scale Configuration 35

5.2.1.1.1 Internal Scale 36
5.2.1.1.2 Serial Scale 43
5.2.1.1.3 Network scale 45
5.2.1.1.4 Sum Scale 47
5.2.1.1.5 Configurable Sum Scale 49
5.2.1.2 Stamping management 54
5.2.1.3 Metrological information 54
5.2.1.4 System Information 55
5.2.1.5 Display Configuration 55
5.2.1.6 Metrological Events Log 55
5.2.1.7 Scale Diagnostics Configuration 56
5.2.1.8 Scale Diagnostics Log 57
5.2.2 Serial Ports 58
5.2.3 Printers/Readers/IOs 58
5.2.3.1 Axle Management 61
5.2.3.2 System Memory 62
5.2.4 Log Management and System Errors 63
5.2.4.1 Error notification 63
5.2.4.2 Device log 63
5.2.5 Access levels 64
5.2.6 Buzzer 65
5.2.7 Date and time 65
5.2.7.1 Changing the date 66
5.2.7.2 Changing the time 66
5.2.7.3 Synchronise with the Internet: 66
5.2.8 Email 67
5.3 CARDS 68
5.4 PDF AND NETWORK PRINTER 69
5.4.1 Network printer 69
5.4.2 PDF 71
5.5 TRANSMISSION 73
5.5.1 Mpp 73
5.5.2 Network 75
5.5.3 Serial 76
5.5.4 Indicator parameters 77
5.5.5 Field bus 78
5.5.5.1 Profibus 78
5.5.5.2 Modbus-RTU 79
5.5.6 Printed data string 81
5.5.6.1 Transmission of printed data string via network 81
5.5.6.2 Transmission of printed data string via serial transmission 82
5.5.6.3 General 83
5.5.6.4 Delete data 83
5.5.7 Analogue output 83
5.6 ACTIVATING THE OPTIONAL SERVICES 84
5.7 THEMES 85
5.8 SHORTCUT KEYS 85
5.9 SWITCHING OFF 85
5.10 ACCESS LEVELS 85
5.11 ERROR MANAGEMENT 86
5.12 SHARING DATA 86
5.12.1 Database 87
5.13 ADDING AN EXTERNAL PRINTER 88
5.14 ADDING A READER 89
5.15 ADDING A NETWORK OR PDF PRINTER 90
5.16 TESTING A SERIAL TRANSMISSION 91

6 OPTIONS 92

6.1 INSTALLING OPTIONAL CARDS 92
6.2 OPTIONAL CARD OVERVIEW 93

6.2.1 Sound card 93
6.2.2 8 in/12 out card 94
6.2.3 Pulse input analogue output card 97

7 ERROR MESSAGES 98

7.1 INDICATOR ERRORS 98
7.2 SCALE ERRORS 98

8 PARAMETER CUSTOMISATION 100

9 ACCESS TO METROLOGICAL PARAMETERS 101

9.1 VERSION WITH CONNECTORS 101
9.2 VERSION WITH CABLE GLANDS 102
9.3 INTERNAL SCALE CALIBRATION 104

10 DISASSEMBLING COMPONENTS 105

10.1 DISASSEMBLING SUPPORT (ONLY FOR STAINLESS STEEL VERSION) 105
10.2 OPENING THE INDICATOR 106
10.2.1 Plastic version 106
10.2.2 Stainless steel version 107
10.3 DISASSEMBLING FRONT PANEL AND DISPLAY 108
10.3.1 Plastic version 108
10.3.2 Stainless steel version 110
10.4 DISASSEMBLING THE INDICATOR POWER SUPPLY UNIT 112
10.4.1 Stainless steel version with cable glands 112
10.5 DISASSEMBLING POWER SUPPLY UNIT FOR SCALE 113
10.5.1 Plastic version 113
10.5.2 Stainless steel version 114
10.6 DISASSEMBLING LITHIUM BATTERY 115
10.6.1 Plastic version 115
10.6.2 Stainless steel version with connectors 116
10.6.3 Stainless steel version with cable glands 117
10.7 DISASSEMBLING WEIGHING CELL UNIT AND INDICATOR POWER SUPPLY UNIT (STAINLESS STEEL VERSION WITH CABLE GLANDS ONLY) 118
10.8 DISASSEMBLING CPU MODULE 119
10.8.1 Plastic version 119
10.8.2 Stainless steel version with connectors/cable glands 120
10.9 DISASSEMBLING DIGITAL SCALE INPUT 121
10.9.1 Plastic version 121
10.9.2 Stainless steel version with connectors 122
10.9.3 Stainless steel version with cable glands 123
10.10 DISASSEMBLING ANALOGUE SCALE INPUT 124
10.10.1 Plastic version 124
10.10.2 Stainless steel version with connectors 125
10.10.3 Stainless steel version with cable glands 126
10.11 DISASSEMBLING SERIAL EXPANSION CARD 127
10.11.1 Plastic version 127
10.11.2 Stainless steel version with connectors 128
10.11.3 Stainless steel version with cable glands 129
10.12 HDMI ASSEMBLY / DISASSEMBLY 130
10.12.1 Plastic version 131
10.12.2 Stainless steel version with connectors 132
10.13 DISASSEMBLING MOTHERBOARD 133
10.13.1 Plastic version 133
10.13.2 Stainless steel version with connectors 134
10.13.3 Stainless steel version with cable glands 135
10.14 CONNECTING PERIPHERAL DEVICES TO SERIAL AND USB PORTS 135

1 INTRODUCTION

1.1 Foreword

- The purpose of this manual is to inform the operator on the basic requirements and criteria for installation, correct and safe use of the weighing equipment and execution of a systematic maintenance through texts and figures
- Always keep this manual easily accessible! Always follow the instructions given!
- The safe operation of the equipment is entrusted to the operator, who should have detailed knowledge of it.
- It is the responsibility of the user to make sure that the installation complies with the current applicable provisions.
- The equipment must only be installed by specialised personnel who must have read and understood this manual.
- “Specialised personnel” means personnel who, as a result of training and professional experience, have been expressly authorised by the “Equipment Safety Manager” to install, use and maintain the equipment.
- For any anomaly detected, please contact your nearest B-TEK Scales Dealer.
- Any attempt to disassemble, modify or tamper with the equipment by the user or unauthorised personnel is forbidden; in this case, the warranty is immediately void and the Manufacturer is not liable for any damage caused to persons or property.
- It is also forbidden to alter or delete the data on nameplates, closing and legalisation stamps of the indicator; therefore, make sure that all the plates are present and readable and, if not, contact the After Sales Service.
- The Manufacturer is not liable for any damage resulting from careless handling of the indicator.
- The information and illustrations below are updated to the date of issue shown on the first page of the manual.
- The Manufacturer is committed to the continuous optimisation of its products with possible modifications to parts or components of the purchased equipment or parts of the software.
- All technical information contained in this manual are the exclusive property of the Manufacturer and must be considered confidential.
- Reproduction and dissemination, even partial, of this manual on paper, IT support and WEB without the written authorisation of the Manufacturer is forbidden.
- It is also forbidden to use this manual for purposes other than those strictly related to the installation, use and maintenance of the indicator.
- In order to detail some aspects of the equipment with greater effectiveness and clarity, some illustrations may represent the equipment without guards. It is strictly forbidden to use the equipment without guards.

1.2 Documentation

The standard documentation supplied with the DD1010 SKYNET indicator consists of:

- **QUICK START**
  This is a multilingual document, printed on paper, which contains brief instructions for immediate use, as well as the declaration of conformity and the main danger warnings.

- **USE, MAINTENANCE AND INSTALLATION MANUAL**
  Multilingual, PDF file, available in printed version on request.

- **APPLICATION MANUAL AND PARAMETERS**
  Multilingual, PDF file available in printed version on request.

Any additional copies of the equipment documentation can be requested from B-TEK Scales Technical Support at 1-844-CAL-BTEK (1-844-225-2895)

1.3 Symbols

Below are the symbols used in the manual to draw the attention of the reader to the different levels of danger in the “Use and Maintenance” operations of the instrument.



DANGER
Information or procedure which, if not carefully performed, results in death or serious personal injury.



ATTENTION
Information or procedure which, if not carefully performed, may result in minor personal injury or damage to the instrument.



WARNING
Information or procedure to advise the operator on the optimal use of the equipment for a longer life, avoid damage or loss of programming, optimise the work in compliance with metric standards.



TECHNICAL SERVICE
The sections showing the following pictogram on the side are the exclusive competence of the qualified technician made available by the manufacturer to carry out complex operations in particular situations. The skills are mechanical and/or electrical and/or electronic and/or software, depending as the case may be.



ATTENTION
IT IS STRICTLY FORBIDDEN TO CARRY OUT SUCH OPERATIONS WITHOUT THE APPROPRIATE AND ADEQUATE AUTHORISATION AS WELL AS SPECIFIC TRAINING! RISK OF INJURY TO PERSONNEL IN CHARGE OR DAMAGE TO THE PURCHASED EQUIPMENT!

1.4 Glossary of terms used

The manual uses technical terminology or terminology with different meaning from the common one. The terms and abbreviations that may be used in the documentation provided are explained below.

DANGER: a potential source of injury or damage to health;

DANGEROUS ZONE: any zone inside and/or near the equipment where the presence of an exposed person poses a risk to the safety and health of that person;

EXPOSED PERSON: Any person who is wholly or partly in a dangerous zone;

RISK: a combination of the probability and severity of an injury or damage to health that may arise in a hazardous situation;

GUARD: component of the equipment used specifically to ensure protection by means of a physical barrier;

PROTECTIVE DEVICE: device (other than a guard) that reduces the risk, alone or associated with a guard;

INTENDED USE: the use of the equipment in accordance with the information provided in the instructions for use;

MISUSE: use the equipment in a different way from that indicated in the instructions for use, but which may result from easily predictable human behaviour;

RESIDUAL DANGER: a danger that could not be eliminated or reduced by design, against which the protections are not (partially or totally) effective;

WEIGHING INSTRUMENT: a measuring instrument used to determine the mass of a body using the action of gravity on that body. A weighing instrument can also be used to determine other quantities, parameters or characteristics related to the mass;

NON-AUTOMATIC WEIGHING INSTRUMENT OR INSTRUMENT: a weighing instrument that requires the intervention of an operator during weighing;

MEASURING INSTRUMENT: any device or equipment or system (the term may be used as a synonym in this manual) with measurement functions as defined by the MID Directive (2014/32/EU).

LEGAL METROLOGICAL CONTROLS: controls for reasons of public interest, public health, public safety, public order, protection of the environment, levying of taxes and duties and fair trading, intended to verify that a measuring instrument is capable of performing its intended function.

AUTOMATIC WEIGHING INSTRUMENTS: Automatic weighing instruments defined below, whose purpose is to determine the mass of a body using the action of gravity acting on that body.

AUTOMATIC WEIGHING INSTRUMENT: An instrument which determines the mass of a product without the intervention of an operator and which follows a predefined programme of automatic processes characteristic of this instrument.

AUTOMATIC CATCHWEIGHER: An automatic weighing instrument that determines the mass of pre-assembled discrete loads (for example prepackages) or single loads of loose material.

AUTOMATIC CHECKWEIGHER: Automatic catchweigher that subdivides articles of different mass into two or more subgroups according to the value of the difference of their mass and a nominal set-point.

WEIGHT LABELLER: Automatic catchweigher that labels individual articles with the weight value.

WEIGH/PRICE LABELLER: Automatic catchweigher that labels individual articles with the weight value, and price information.

O.I.M.L. – International Organization of Legal Metrology OIML RXX requirement
Where XX is used to specify the requirement according to the category of measuring instruments

OIML R76-1 and OIML R76-2: (NAWI) Non-automatic weighing instruments.

PERSONAL PROTECTIVE EQUIPMENT (PPE): Personal protective equipment means any equipment intended to be worn and/or used by the worker for the purpose of protecting him/her against one or more risks that could endanger safety or health at work, and any element or accessory intended for this purpose.

The following is not personal protective equipment:

- Ordinary occupational clothing and uniforms not specifically designed to protect the safety and health of the worker;
- The equipment of emergency and rescue services;
- Personal protective equipment of armed forces, police forces and service personnel for maintaining law and order;
- Personal protective equipment specific to road transport vehicles;
- Sporting materials;
- Materials for self-defence or deterrence.

Portable devices to identify and report risks and harmful factors.

USER: The user (businessman/company) is considered to be the person using the equipment for its intended use or entrusting its use to competent and specifically trained persons.

ADVANCED QUALIFIED TECHNICIAN: This term refers to a technician who has specific skills in the metrology field (with reference to the provisions of metrology directives 2014/31/EU and 2014/32/EU and related metrology terminology), who can read wiring diagrams and technical documentation of the equipment and who has good electrical knowledge in order to adjust electrical parts and electrical systems for maintenance, repair, calibration and replacement. He/she can operate in the presence of voltage inside control boxes, junction boxes, control equipment etc. only if he/she is a suitable person (see EN50110-1 and EN 50110-2).



DANGER
It is the responsibility of the purchaser to make sure that he/she has all necessary information before carrying out the installation, adjustment and operation of the equipment purchased.

1.5 Description of the indicator

The DD1010 SKYNET indicator allows performing highly accurate and reliable weighing operations.

- Designed for industrial applications.
- Supplied as standard with metrological weighing management software.
- Body in ABS and stainless steel; available both in tabletop and wall mounting version.
- Simple and immediate use with the 5.7” touch screen colour display.
- Flexible and customizable functions and graphic layout.
- Equipped with a powerful relational SQL data base for the management of weighing data.
- Advanced connectivity and network communication.
- Programming and customisation from PC via network.

1.6 Key

The following manual refers to operations available in different models defined at the time of purchase. Below is the terminology used in this manual.

PLASTIC VERSION: applies only to the plastic version. DD1010 Skynet

STAINLESS STEEL VERSION WITH CONNECTORS: applies only to the stainless steel version with connectors. DD1010ic Skynet

STAINLESS STEEL VERSION WITH CABLE GLANDS: applies only to the stainless steel version with cable glands. DD1010i Skynet

STAINLESS STEEL VERSION: applies to the stainless steel version with connectors and cable glands. DD1010ic Skynet and DD1010i Skynet

If nothing is specified, it means present in all models.

1.7 Technical characteristics of the indicator

Power supply

Direct	12 Vdc/3 A (Min 11 V - Max 15 V)
Via network adapter	L+N+R 110 - 240 Vac (-15% ... +10%) 1.8 A 50 - 60 Hz 60W Max
Ground socket	Equipotential for weighbridge

Scales

Total	1/2 (or 1 analogue, or 1 digital, or 2 analogue or 2 digital)
Repeater operation	

Analogue scale

Connectable cells	Up to 12 x 350 ohm analogue cells per scale
Minimum impedance	29 ohm per scale
Load cell power supply	4.5-5 Vdc
Internal resolution	1000000 points at 10 Hz
Resolution in type-approved version	1 range of 6000
Maximum input signal	35 mV
Sensitivity	0.6 µV/division
Full scale stability	< 5 ppm/°C
Zero stability	< 5 ppm/°C

Digital scale

Connectable cells	Up to a scale with 16 digital cells or two scales with 8 digital cells each
Load cell power supply	8 to 15 Vdc
Internal resolution	200000 points @ 25 conv/s
Resolution in type-approved version	1 range of 6000

Environmental characteristics

Compensated temperature range	-10 to + 40 °C
Operating range	-10 to + 40 °C
Maximum humidity	85% @ 40 °C
IP protection rating	Plastic version and stainless steel version with connectors: direct outputs IP 20 and front IP 65. Stainless steel version with cable glands IP 69K

User interface

Video	5.7” LED TFT display
Keyboard	Touch screen

Communication ports

USB Type A	4 (+1 internal)
Serial ports	2 x RS232 (COM4/COM6) Or 1xRS232 + 1xRS422 (COM4/COM7) Or 2xRS232 + 1xRS422 (with optional bifid cable) 1xRS232 (COM8 optional) 1xRS232/RS422 (COM9 optional)
Ethernet 10/100	1

Expansions

Slots for optional boards	2 + dual serial option

1.8 Declaration of conformity

The declaration of conformity is available in the QUICK START manual to which you can refer for details.

1.9 Indicator overall dimensions and weight

1.9.1 Plastic version

WARNING

The plastic version, whether it is placed on a table or mounted on a wall, is the same. Only the indicator direction changes.

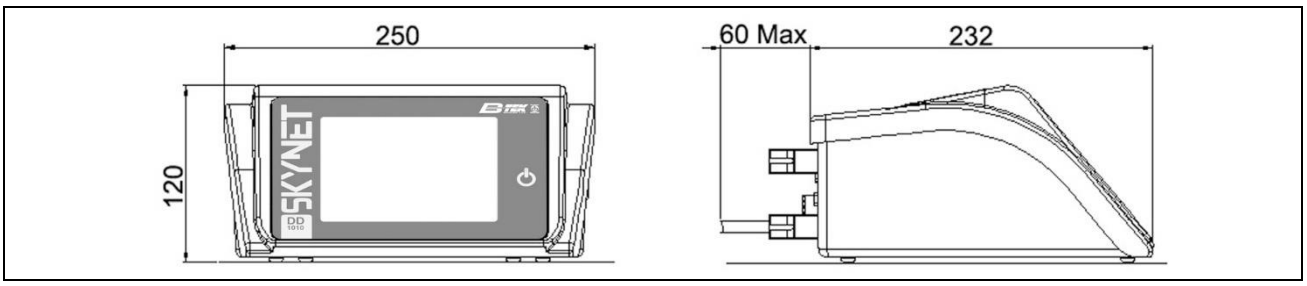

Figure 1.7-1 - Weighing indicator dimensions, plastic version

- Dimensions (in mm): see Figure 1.1.
- Weight: 2 kg

1.9.2 Tabletop stainless steel version

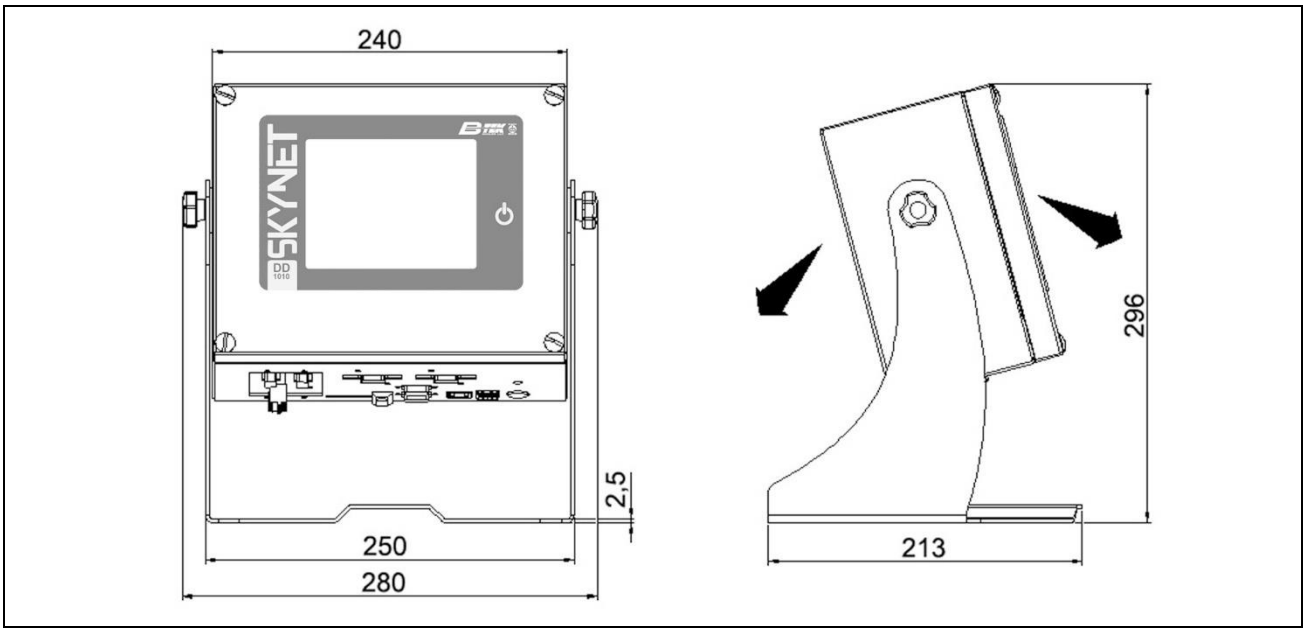

Figure 1.7-2 - Weighing indicator dimensions, tabletop stainless steel version

- Dimensions (in mm): see Figure 1.2.
- Weight: 5 kg

1.9.3 Wall-mounted stainless steel version

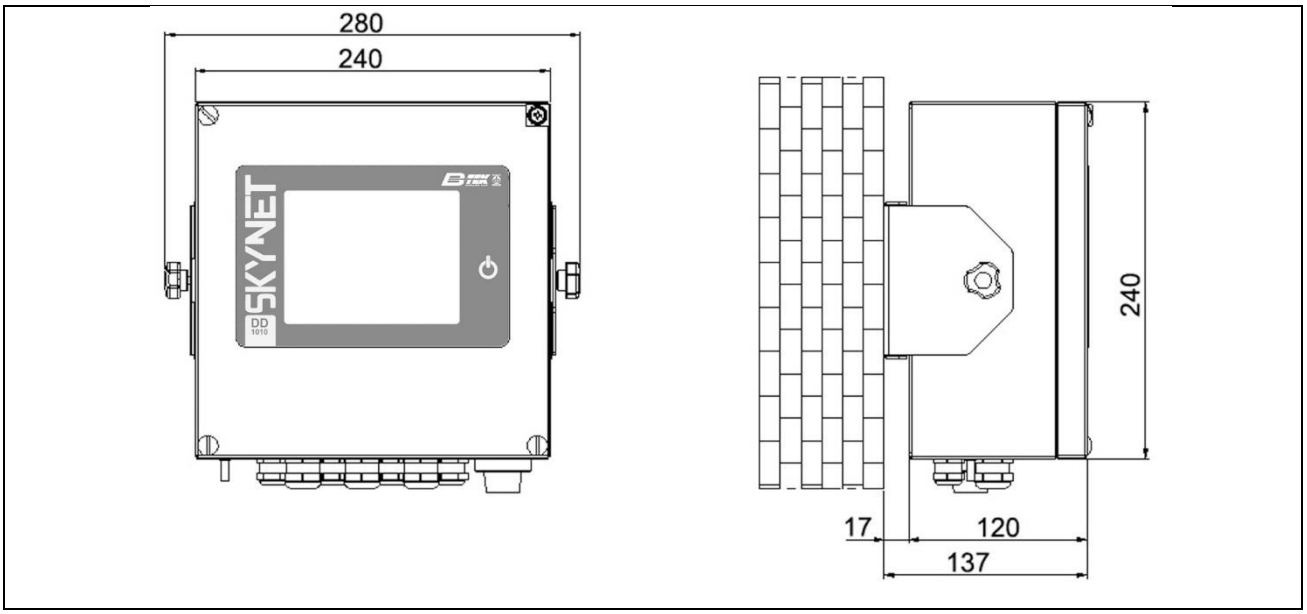

Figure 1.7-3 - Weighing indicator dimensions, wall-mounted stainless steel version

- Dimensions (in mm): see Figure 1.3.
- Weight: 5 kg

1.10 Instructions for disposal of electrical or electronic waste



This symbol on the weighing instrument purchased indicates that:

- This electrical or electronic equipment cannot be disposed of as solid urban waste.
- Separate collection is required.
- It can be returned to the distributor when purchasing new equipment.
- Improper use or disposal of such equipment may cause pollution to the environment or endanger human health.
- Failure to comply with the above indications is subject to sanctions according to the regulations in force.

In particular:

- Outer casing and mechanical components are made of plastic and/or metallic materials.
- The casing contains printed circuit boards with electronic components.
- The electrical connections are made with insulated copper conductors.



ATTENTION

Dispose of this equipment via separate waste collection either handing it over to the distributor or to separate waste collection centers.

1.11 Instructions for technical service request

Any request for information or service intervention at the customer's premises or clarification regarding the technical aspects of the equipment or of this document must be addressed to:

B-TEK Scales, LLC

1510 Metric Ave.
Canton, OH 44706
Phone. 1-844-225-2895 - Fax. 330 471-8909

www.b-tek.com

techsupport@bscales.com

In case of malfunctions or faults for which the intervention of specialised technicians is required, please contact B-TEK Technical Support at https://www.b-tek.com/ecom/questions
or directly contact your nearest authorized dealer.

In particular, the customer must provide the manufacturer with the following data:

- type of equipment - model, identification number, year of manufacture;
- serial number of the instrument available on the stamped label;
- characteristics of the system on which the equipment is installed;
- maximum capacity "Max=" and metrology division "e="
- shortcomings detected
- exact address of the site/factory where the equipment is installed
- contact person.

1.12 Warranty

B-TEK SCALES, LLC. guarantees that the equipment covered by this warranty will be free from defects in workmanship and materials for a period of time from the date of shipment as stated in this document.

Coverage:

1. Warranty applies to B-TEK SCALES, LLC. Indicator / Terminal products shipped after November 1, 2020.
2. The warranty covers defects in materials and / or workmanship that lead to product failure. The warranty provides for new or repaired product and / or component(s) to replace defective part(s). The warranty coverage period begins at the date of shipment from B-TEK.

Indicator / Terminal	Coverage
DD1010 Skynet	1-Year

Notes:
* 5-Year warranty when indicator is purchased with Centurion-DT Motor Truck Scale

** Warranty covers hardware only. Custom software is not part of this warranty statement

3. Warranty repair must be provided by an authorized distributor / service provider or B-TEK Scales, LLC direct.
4. B-TEK will pay the transportation charges, via standard ground delivery service, for warranty repair parts sent to an authorized distributor or end user location. Defective or failed parts must be returned, freight prepaid, to B-TEK for evaluation.
5. This warranty does not cover damage due to the following: lightning, surge voltage, water ingress, misuse, abuse, accident, neglect, alterations / modifications, improper or unauthorized installation / repair, improper testing, superficial / cosmetic damage or deterioration, overload or natural disaster.
6. Other peripheral devices (printers, score board…) supplied along with any product listed above are not covered under this warranty. Please refer to the appropriate warranties for information on peripheral devices.
7. Warranty valid in North America only and is limited to the initial buyer / installation location and is not transferable

The foregoing warranty is exclusive and in lieu of all other express or implied warranties, guarantees, agreements, or representations made by any person with respect to B-TEK SCALES, LLC. Products, including any implied warranty or merchantability or fitness for a particular purpose, which are hereby specifically disclaimed. In no case shall B-TEK SCALES, LLC. be liable for any indirect, special, incidental, or consequential damages resulting from any breach of warranty or otherwise, whether based on contract, tort, or other legal theory. This warranty applies only in North America only.

1.13 Spare parts

FIG.	REF.	B-TEK Item #	CODE	DESCRIPTION
1.11-1	1	899-100100	404602	POWER SUPPLY UNIT BOARD DC-DC 9-18, +15V FOR DIGITAL SCALE
1.11-2	1	899-100204	405841	DD1010 SKYNET MOTHERBOARD FOR COLIBRI T20 CORE
1.11-1/ 1.11-2	2	899-100203	404991	DD1010 SKYNET 5.7” SIZE LCD SUPPORT BOARD
1.11-1	3	899-100207	47180119	MOTHER BOARD-“DIADE” SERIES ANALOGUE/DIGITAL CONVERTER CONNECTION
1.11-2	3	899-100210	47180230	MOTHER BOARD-ANALOGUE/DIGITAL CONVERTER DD1010 SKYNET STAINLESS STEEL VERSION CABLE GLAND L=20 CM
1.11-1	4	899-100209	54830002	FLAT ZIF FPC 40 PIN PITCH 0.5MM TOP-TOP CONTACTS A TYPE L=15 CM
1.11-2	4	899-100211	54830006	FLAT ZIF FPC 40 PIN PITCH 0.5MM TOP-TOP CONTACTS A TYPE L=35 CM DD1010 SKYNET STAINLESS STEEL VERSION CABLE GLANDS AND DIRECT OUTPUTS.
1.11-1	5	899-100095	52050019	SWITCHING POWER SUPPLY UNIT 100-240VAC/12VDC OUTPUT 12VDC/60WATT, IEC SOCKET, 2 FERRITE CABLE AND 4-PIN CUSTOMISED POWERDIN OUTPUT CONNECTOR
1.11-2	5	899-100212	52050034	SWITCHING POWER SUPPLY UNIT 88-264VAC/12VDC IOUT=2.1A 25W, INSULATED INPUT/OUTPUT TERMINALS DD1010 SKYNET STAINLESS STEEL VERSION CABLE GLANDS
1.11-1	6	899-100193	404701	DIGITAL CONV. BOARD FOR “DIADE” SERIES DIGITAL CELLS
1.11-1	7	899-100205	57130086	BOARD CORE COLIBRI T20 512MB
1.11-1	8	899-100208	47180129	MOTHER BOARD-“DIADE” SERIES DIGITAL CELL INTERFACE CONNECTION
1.11-2	9	899-100192	46050253	SIGMA-DELTA A/D CONV.UNIT COMPLETE WITH ZAMAK CASING FOR ANALOGUE CELL

For other spare parts not listed, please refer to the Service Department.

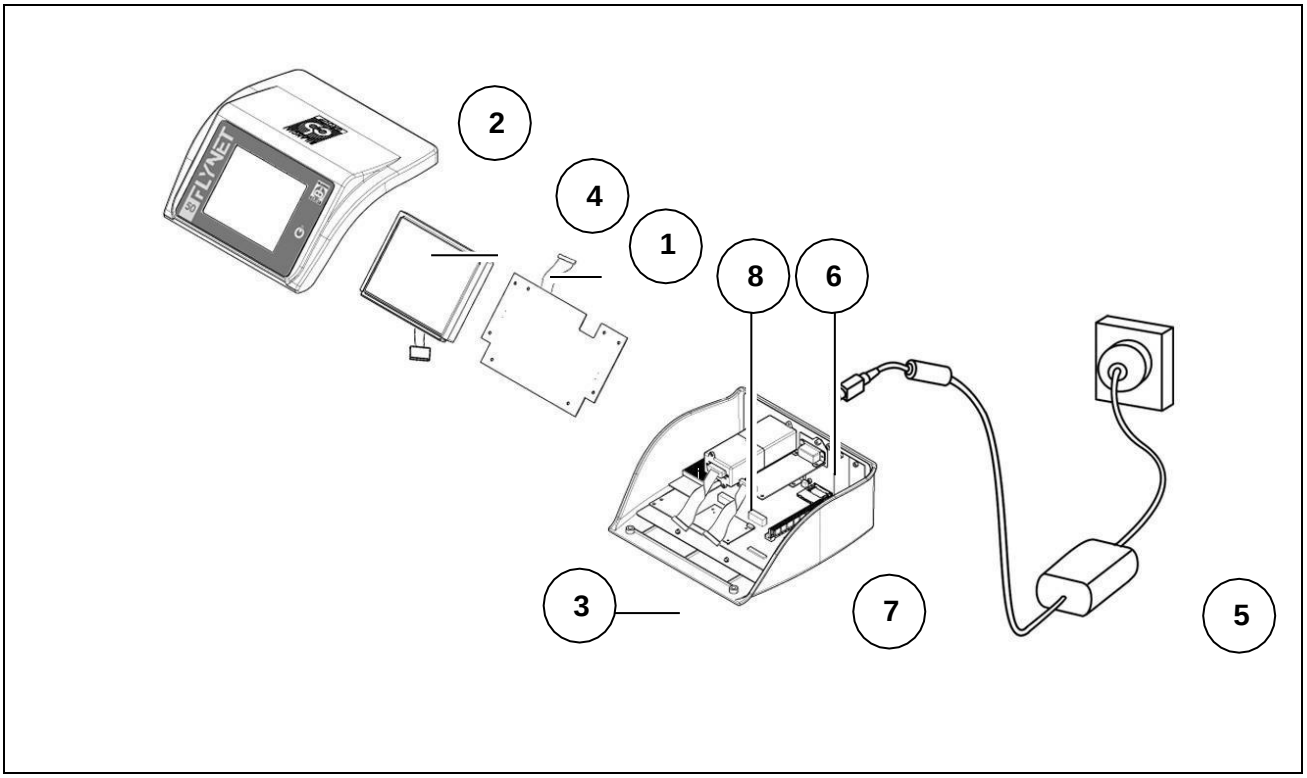

Figure 1.11-1 – Plastic indicator spare parts

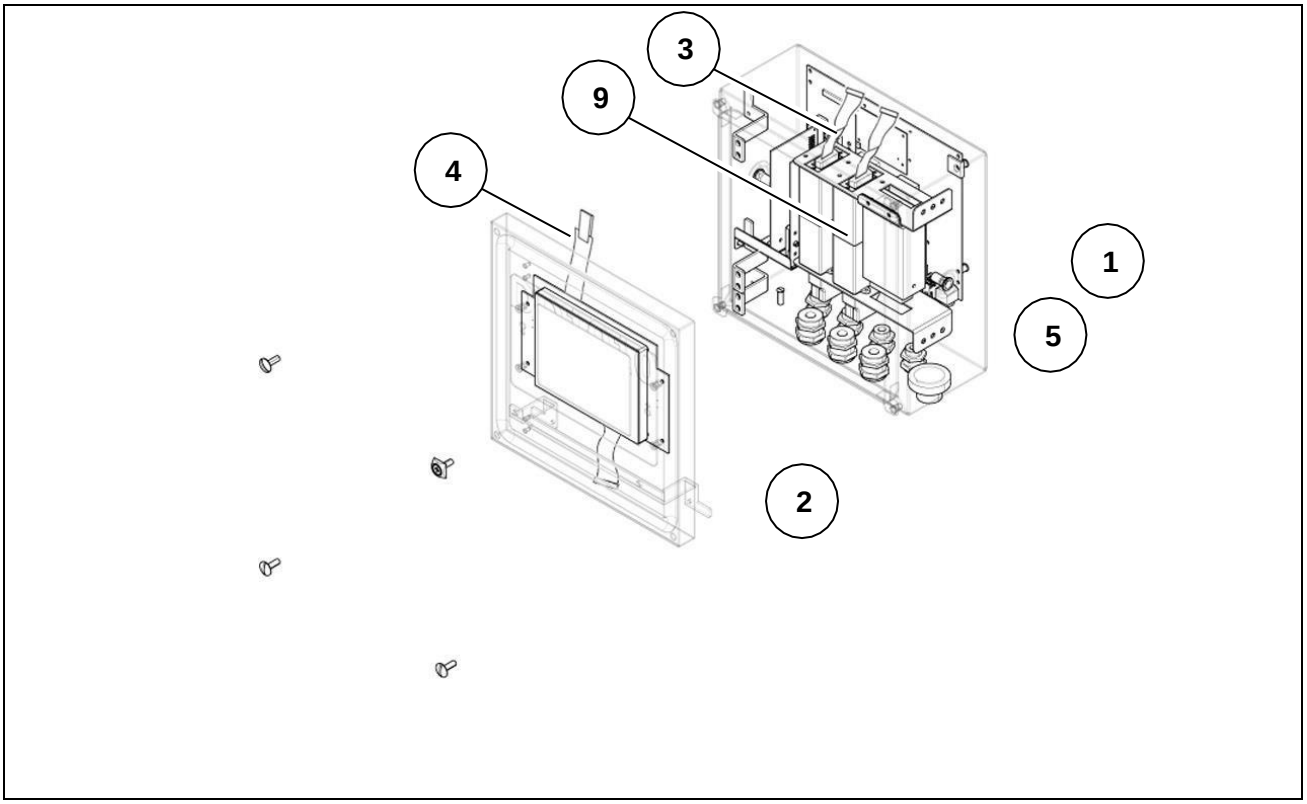

Figure 1.11-2 - Stainless steel indicator spare parts

2 SAFETY REQUIREMENTS

2.1 Not allowed uses

The equipment purchased is a metrological instrument intended for non-automatic weighing and as such has been designed and manufactured. The primary use for which it is intended is the weighing of goods.

- It is forbidden to use the indicator without the necessary precautions for safe use.
- It is forbidden to use the indicator in places with a potentially explosive atmosphere or in places where fire hazard exists.
- It is forbidden to use the indicator outside the environmental, electrical and metrological conditions prescribed and indicated in this manual.
- Misuse of the indicator or use with functions other than those for which it was manufactured is prohibited.
- Use is forbidden if it has not been correctly and completely installed in the site or place for which it is intended.
- Use is forbidden in case of non-compliance with power supply technical specifications.

Uses other than the one for which it has been designed and manufactured relating to non-automatic weighing within the limits set by the manufacturer represent a misuse and are prohibited, unless formally authorised by the Manufacturer.

2.2 Regulations

The conditions of use of the electronic indicator for weighing instruments are governed by the regulations in force in the country of use.
Use under conditions that do not comply with these regulations is prohibited.

2.3 Conditions of use

- Carefully follow this manual during use.
- If you find any discrepancies between the contents of this manual and the equipment in your possession, contact your Retailer or the After-Sales Service of the Manufacturer for clarification.
- Strictly respect the indications on the warning and danger plates on the indicator.
- Make sure that the indicator is complete with all the protections it has been provided for (cover and protection devices) as shown in the technical drawings in the manual; before use and on a regular basis, check also the integrity of the cables and their proper connection.
- Make sure that the indicator is always connected to a power socket equipped with an effective ground pin, checking that this line complies with the regulations in force in the country of use. Make sure there is no difference in potential between ground and neutral.
- If the indicator must be connected to other devices such as computers or other equipment, disconnect them from the power supply before making the connections.
- Any maintenance and/or repair work must only be carried out by authorised personnel.
- Before carrying out any maintenance work, always disconnect the indicator from the power supply and wait a few minutes before accessing its internal components.

3 DELIVERY AND INSTALLATION

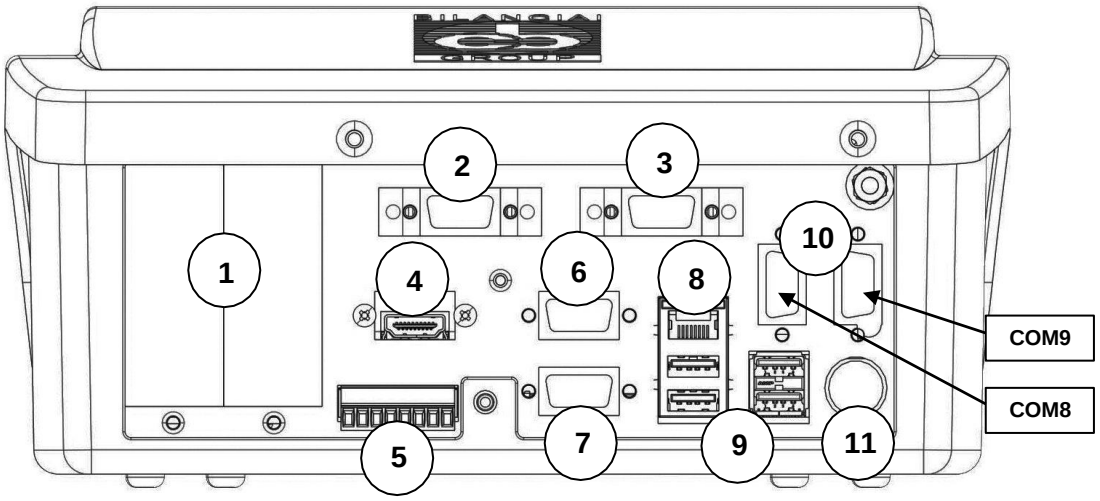

Figure 3-1 - Indicator bottom with connectors

Key:

1. Slots for optional boards
2. Scale 1
3. Scale 2
4. HDMI port (optional)
5. I/O port
6. COM4 port
7. COM6/ 7 port
8. Ethernet port 10/100 Mb/s
9. USB HOST ports
10. Serial board expansion (COM8/9 optional)
11. 12 V power supply (through external power supply unit)

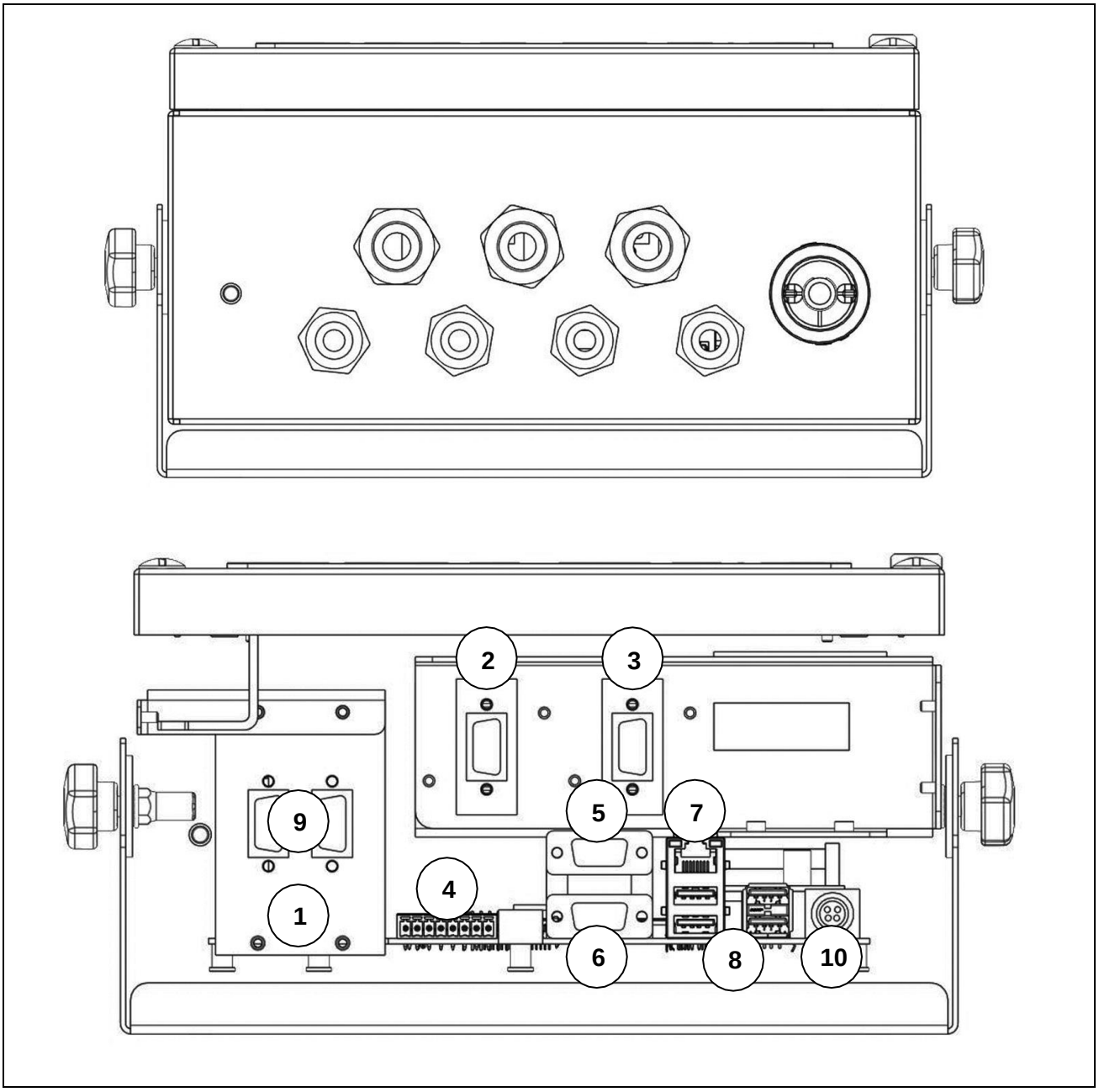

Figure 3-2 - Indicator bottom with cable glands

Key:

1. Slots for optional boards
2. Scale 1
3. Scale 2
4. I/O port
5. COM4 port
6. COM6/ 7 port
7. Ethernet port 10/100 Mb/s
8. USB HOST ports
9. Serial board expansion (COM8/9 optional)
10. 12 V power supply (through external power supply unit)

3.1 Installation



ATTENTION

This indicator must be installed indoors, protected from the weather, as it is not designed to withstand the elements.

3.1.1 Tabletop installation

Place the indicator on a fixed surface (table or desk without wheels) so that the monitor is not hit by direct light to avoid reflections, making sure that it is stable and well supported on the non-slip feet.

3.2 Connecting the indicator to the mains

3.2.1 Checks



DANGER

Check that:

- *The power supply line of the indicator has voltage and frequency as indicated on the warning plate on the power supply unit.*
- *The socket to which the indicator is connected is provided with grounding pin.*
- *Warning and danger plates are present on the hood of the instrument.*
- *If this is not the case, inform the maintenance personnel or our Service Department directly.*

The plug of the power cable has an IP20 protection rating, provide a connection to the mains adequately protected according to environmental conditions.



WARNING

The indicator complies with the European directive on electromagnetic compatibility, however it is good practice to provide a separate power supply from power drives.



WARNING

Do not place power cables next to the connection cables of the indicator that could cause disturbance to the operation of the instrument. Use the supplied cable to connect to the indicator. If the cable is short, do not extend it with joints, but contact the Manufacturer.



DANGER

Insert the plugs and switch the indicator on only after making all the other connections to any peripheral devices (scale, printer, serial ports, Ethernet, I/O, etc.).

3.2.2 Wiring diagram (version with connectors)

For the correct connection of the indicator to the mains, proceed as follows:

- Connect the indicator to the power supply unit;
- Connect the power supply unit to the correct socket using the proper cable.

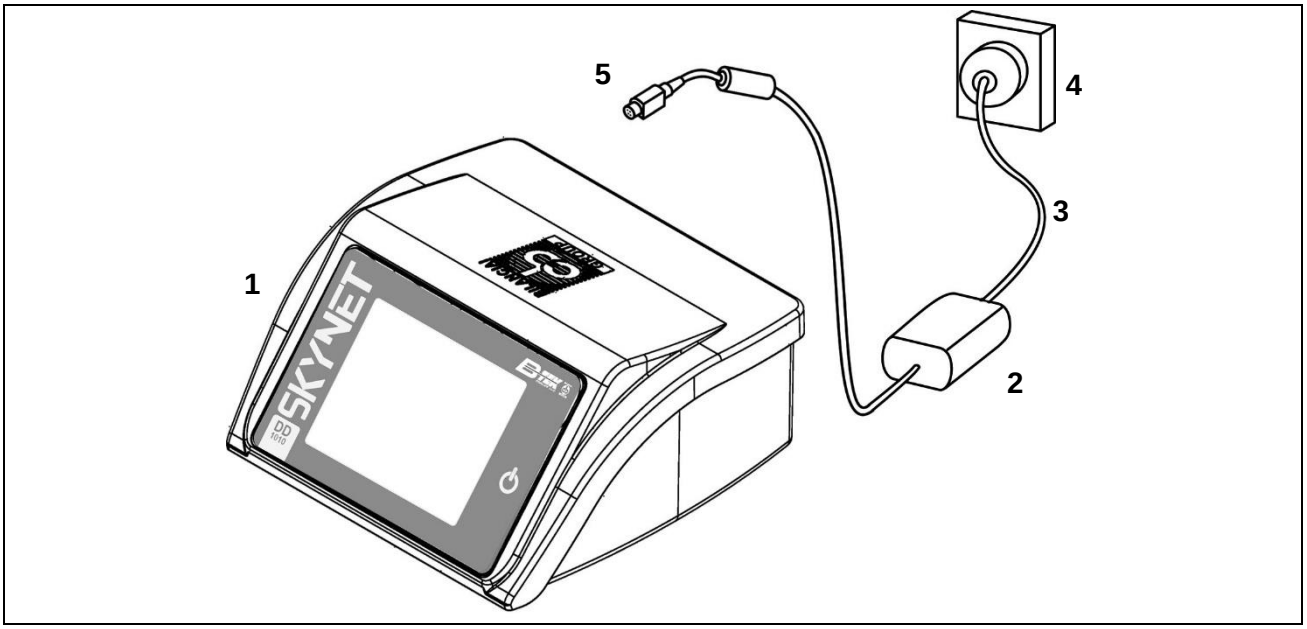

Figure 3.2-1 - Connecting the indicator to the mains

Key:

1. Weight display indicator.
2. Power supply unit.
3. Power supply unit cable.
4. Mains socket.
5. 12VDC power plug.

Power supply cable

The power supply cable is generally supplied with IEC 320 socket and 10 A Italian plug (L+N+G). It can be supplied with SCHUKO plug on request.

12V direct current power supply

The D1010 weighing indicator can also be powered from a direct current source with 12V rated voltage.

- Power can come from either a lead-acid battery or a stabilised power supply unit.
- The source must be able to deliver 4A.
- An external disconnect switch must be provided.

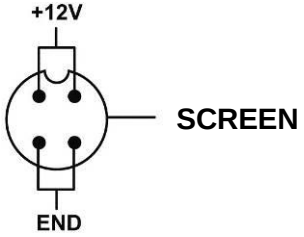

Figure 3.2-2 - Power supply socket view

WARNING
The sizing and laying of the power cable and the external disconnect switch are the responsibility of the customer.

3.2.3 Wiring diagram (version with cable glands)

Connection to the power supply line is the responsibility of the installer. The customer must install the protective conductor and the power supply cable through specialised personnel.

Protective ground connection
Connect the system protective ground to the indicator with a yellow-green cable of at least 6mm².
Use the ground screw located under the indicator.
The equipotential conductor from the scale must also be connected to the same grounding point.

Lay a three-pin cable with a cross-section suitable for the type of system. For the choice of the cable, refer to the technical power supply characteristics.
Also provide a disconnect switch upstream of the supply line. The disconnect switch must be accessible during system maintenance operations.
Essential characteristics of the power supply cable:

- Double insulation cable with 3 coloured inner conductors (line=brown, neutral=blue, protective ground=yellow-green)
- Inner conductors with cross-section from 1.5mm² to 2.5mm²
- External sheath diameter from 5 to 10mm



Key
1. L = Line, brown conductor
2. N = Neutral, blue conductor
3. T = Protective ground, yellow-green conductor

Figure 3.2-3 – Terminal board view

DANGER

Check that:

- *The power supply line of the indicator has voltage and frequency as indicated on the stamped plate on the indicator bottom;*
- *The socket to which the indicator is connected is provided with grounding pin;*
- *Warning and danger plates are present on the hood of the instrument;*
- *If this is not the case, inform the maintenance personnel or our Service Department directly.*

Scale cable wiring

A pre-wired cable is normally supplied for connecting the indicator to the weighing platform.

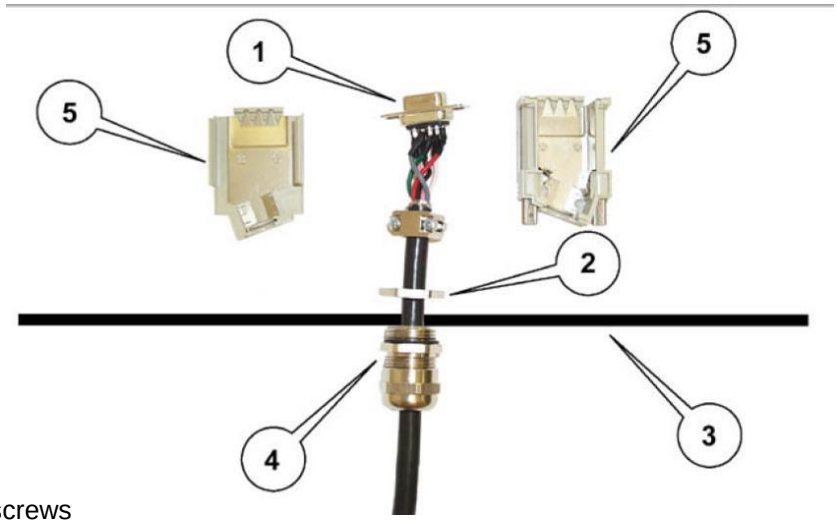

Key

1. 9/15 pin male D-sub connector
2. Nut
3. Indicator back wall
4. Cable gland
5. Shielded shell (cap) with sealing screws

Figure 3.2-4 - Load cell connection

- Insert the 9/15 pin connector in the scale input hole
- Lock the cable gland with the nut.
- Refit the shell with the drilled sealing screws.
- Insert the connector on the bottom of the CPU housing.

The connection can be different depending on the type of cell that is fitted on the weighing platform: analogue or digital. In case of a duplex scale, connect scale A to connector JBIL1, and scale B to JBIL2.

WARNING

The cable shield must always be connected to the metal protection cap of the 9/15 pin connector. Do not insert the connection cable to the weighing platform into routes with cables directed to power drives.

3.3 Connecting the indicator to the weighing platform

For the connection of the indicator to the weighing platform, a pre-wired cable is normally supplied whose female connector must be fully inserted into the 9/15 pin male connector (JBIL) located at the bottom of the indicator. The connection can be different depending on the type of transducer that is fitted on the weighing platform: analogue or digital.



WARNING

The cable shield must always be connected to the metal protection cap of the 9/15 pin connector. Do not insert the connection cable to the weighing platform into routes with cables directed to power drives.

3.3.1 Wiring diagram (with platform)

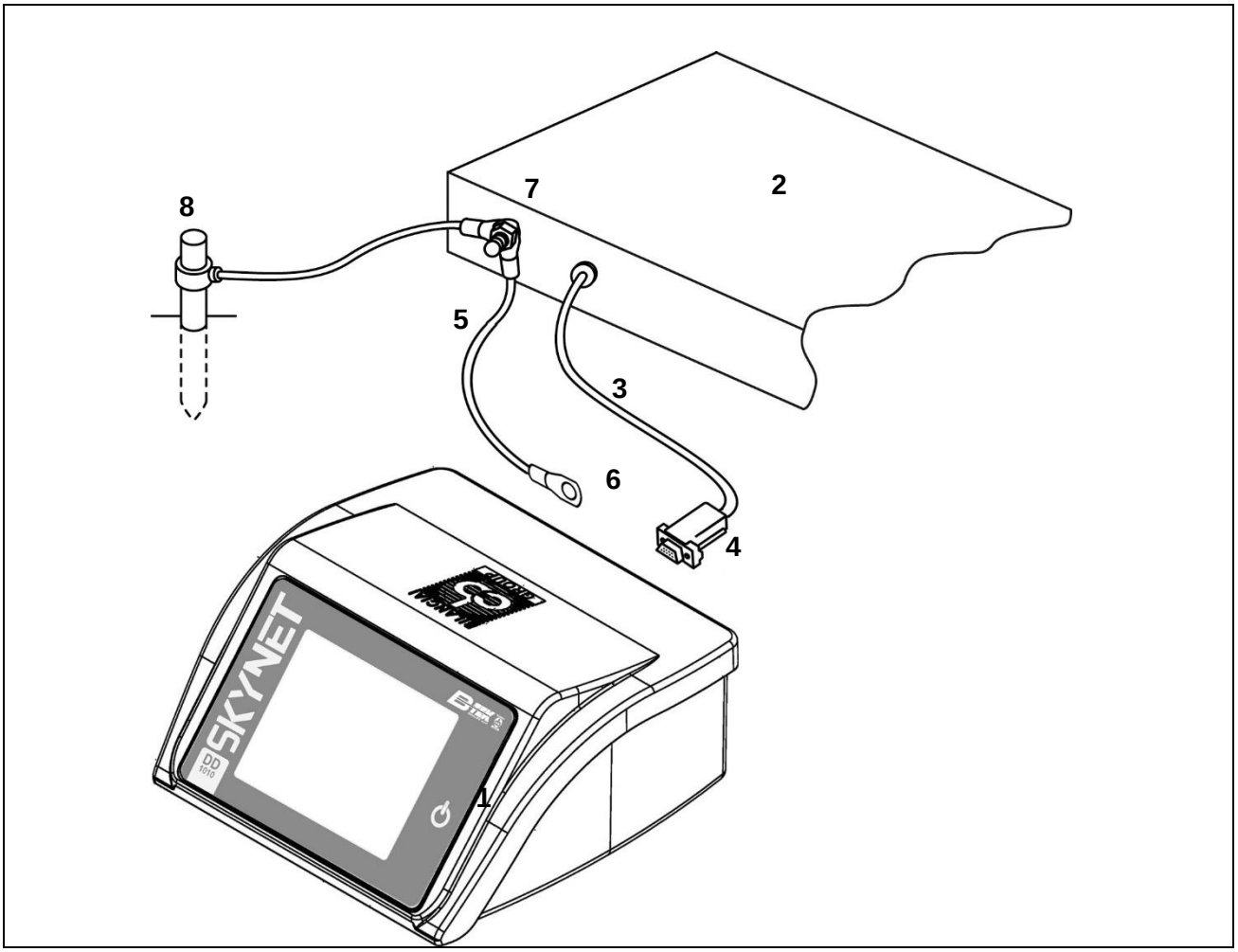

Figure 3.3-1 - Connecting the indicator to the scale

Key:

1. Weight display indicator.
2. Weighing platform or weighbridge.
3. Scale cable with 9/15 pin connector.
4. Scale input.
5. Equipotential cable with eyelet wire terminals.
6. Ground screw.
7. Ground screw on the platform.
8. Ground poles (for weighbridge only).

3.3.2 Equipotential between indicator and weighing platform

Check that there is equipotential between the metal parts of the indicator and the weighing platform. If in doubt, connect indicator and platform with a ground cable of at least 6mm², using the ground screw on the bottom of the indicator.
The cables and accessories for this connection are not included in the supply but are the responsibility of the customer.

3.3.3 Digital Scale serial connection

15-pin female D-sub connector.

PIN	DESCRIPTION
1	485-
2	EX +
3	EX +
4	EX -
5	EX -
6	485+
7	NC
8	NC
9	EX -
10	NC
11	NC
12	NC
13	NC
14	NC
15	NC

NC = Reserved do not connect

The connection to the digital cells is made with serial transmission type RS485 using a shielded 6-conductor cable.
The pins with the same signal can be connected in parallel.

3.3.4 Analogue Scale serial connection

9-pin male D-sub connector.

PIN	DESCRIPTION
1	SIG-
2	SIG+
3	EXC+
4	EXC-
5	SENSE+
6	NC
7	NC
8	SENSE-
9	NC

NC = Reserved do not connect

3.4 Serial connections

3.4.1 COM4 serial connection

9-pin female D-sub connector.

PIN	DESCRIPTION
1	NC
2	RX232
3	TX232
4	NC
5	GND
6	NC
7	RTS
8	CTS
9	5V

NC = Reserved do not connect

3.4.2 COM6/7 serial connection

9-pin female D-sub connector.

PIN	DESCRIPTION
1	RX422 -
2	RX 232
3	TX 232
4	NC
5	GND
6	RX422 +
7	TX422 -
8	TERMINATOR
9	TX422 +

NC = Reserved do not connect



WARNING
On this D-sub connector there are two complete serial ports COM6 RS232 and COM7 RS422.

3.4.3 COM8/9 serial connection (optional)

9-pin female D-sub connector.

PIN	DESCRIPTION
1	RX422 -
2	RX 232
3	TX 232
4	NC
5	GND
6	RX422 +
7	TX422 -
8	TERMINATOR
9	TX422 +

NC = Reserved do not connect



WARNING

On this D-sub connector there are two complete serial ports COM8 RS232 and COM9 RS232/RS422.

3.4.4 RS232 connections



ATTENTION

Maximum use conditions provided for by standard RS232:

Maximum transmission distance: 15 m

Maximum voltage at the ends: ± 12 Vdc

For connection to external devices, it is recommended to use a shielded cable paying attention to connect the shield to the metal part of the 9-pin connector shell.

3.4.5 RS422 connections

- Create the jumper between pin 6 and pin 8 to connect the termination resistance.



ATTENTION

Maximum use conditions provided for by standard RS422:

Maximum transmission distance: 1200 m

Maximum voltage at the ends: +/- 7V

For connection to external devices, it is recommended to use a twisted pair shielded cable paying attention to connect the shield to the metal part of the 9-pin connector shell.

3.5 Input/Output Connection

Input/output contacts are available on the back of the indicator on the I/O terminal block.



Figura 3.5.1 – Terminal block pinouts

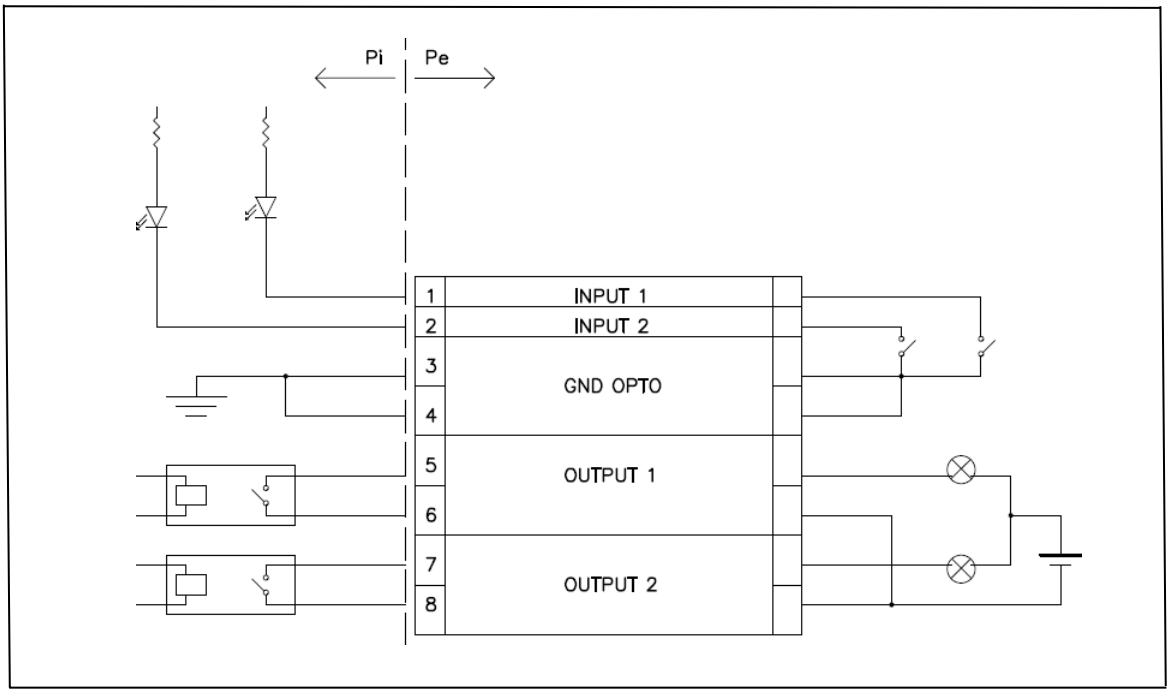

Figura 3.5.2 – I/O terminal block connection diagram for Input/Output connection

3.5.1 Input connection



ATTENTION

Electrical features

Input: maximum voltage ≤ 5 Vdc

maximum current ≤ 5 mA

The inputs can be controlled by voltage-free contacts or by NPN transistors (common negative).

3.5.2 Output connection



ATTENTION

Electrical features

Output: commutable voltage ≤ 24 V (AC/DC)

commutable current ≤ 190 mA (AC/DC)

solid state contact (OPTOMOS).

DANGER



When the weighing system is inserted in complex systems which pose a hazard for system operators, perform several empty manoeuvres assisted by specialist personnel to acquire the necessary familiarity to operate in safety.

4 CONTROLS, SWITCHING ON AND OFF

4.1 On/Off key

To switch on the correctly powered indicator (connected to the mains through the power supply unit), press the key on the front part.

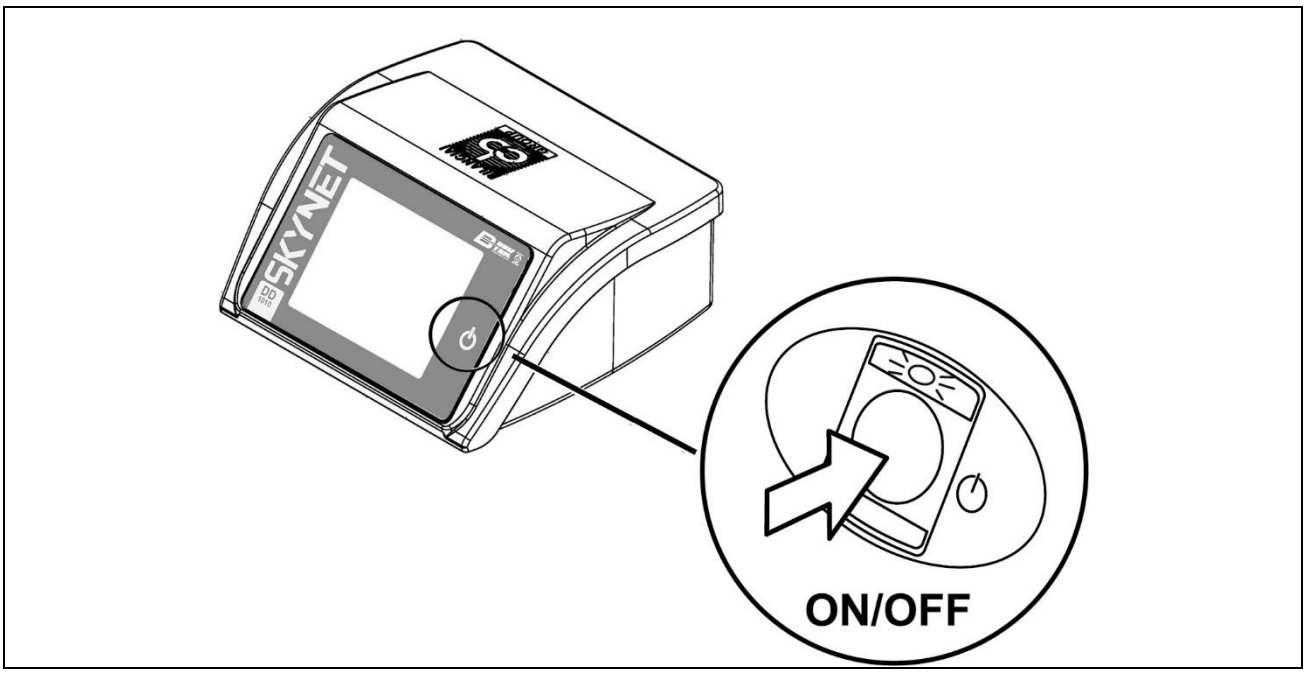

Figure 4.1-1 – Switching on

A progress bar on the display with messages indicates the start phase.

Press again the key, the LED and the display switch off.
In this situation the indicator interrupts its functions; in any case the indicator is powered but with almost zero consumption.
This status is indicated by the green LED that switches on on the power supply unit.

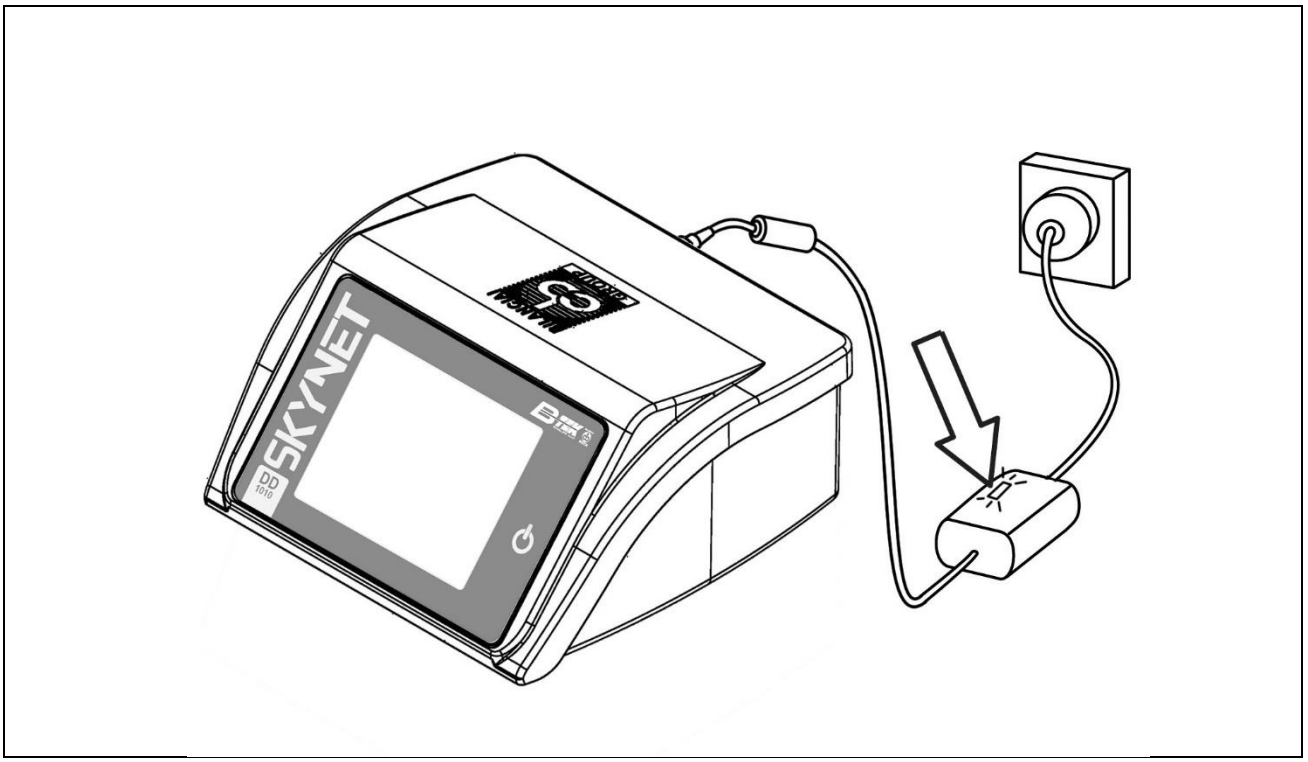

Figure 4.1-2 - Green LED on the power supply unit

To switch the system completely off, pull the plug out of the power outlet

4.2 Touch screen

The commands are sent to the indicator via the TOUCH SCREEN.

4.3 External keyboard and mouse

It is possible to connect a mouse and keyboard to the USB ports as control devices.
The indicator recognizes common USB mouses and USB keyboards with plug & play system.

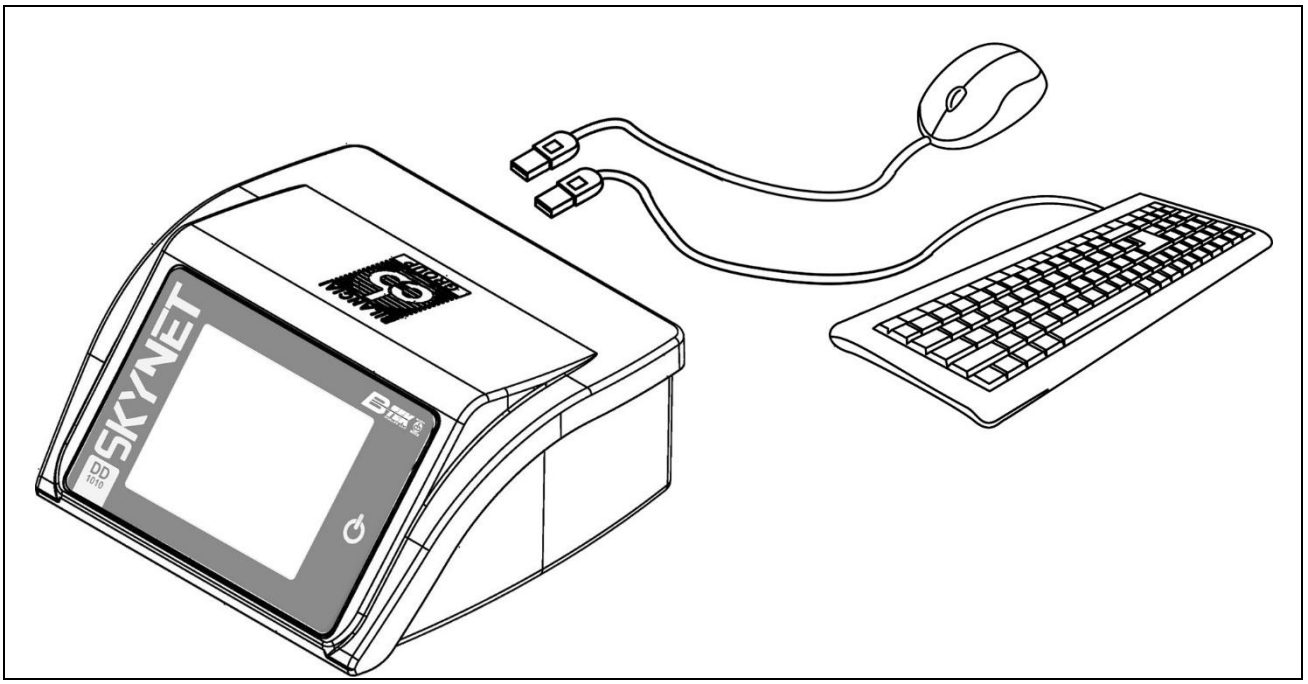

Figure 4.3-1 - USB 2.0 Socket

5 USING THE INDICATOR

Refer to the application manual and parameter manual.

5.1 Indicator configuration

It allows setting the parameters for hardware components and system services.
These parameters are divided into functional groups. To access each group, simply press on the desired icon.

1	Application	Configuration: Archives, Others, Inputs and Outputs
2	System	Configuration: Metrology Configuration, Axle Weighing, Serial Ports, Printers/Readers/IOs, Error Notification, Access Levels, Buzzer, Date/Time, Device Log and Email.
3	Cards	Card type configuration (Cb, Neutral, Tax Code and Coded Tax Code), controls, automatic printing and timeout.
4	PDF-Network printer	Configuration: Network printer and PDF printer.
5	Transmission	Configuration: Mpp transmission, Network transmission, Serial transmission, Indicator number, Fieldbus transmission
6	Printed data string	Configuration: transmission via network, transmission via serial port, general
7	Analogue output	Configuration: analogue output

5.1.1 Application

Within this menu it is possible, depending on the application installed, to set the operation of the weighing indicator. Each software has different operation archives, depending on their configuration it is possible to customise the device.
To know the various levels of customisation, refer to the manual of the installed software.

5.2 System

2.1	Metrology management	Sealing, metrology information, parameters and scale calibration
2.2	Serial ports	COM configuration (serial ports)
2.3	Printers / Readers / Inputs Outputs	Axle management (when service active), System memory, setting printers, readers, inputs and outputs
2.4	Error notification / Device log	System error management
2.5	Access level	Access passwords allow limiting setting and/or deletion operations.
2.6	Buzzer	Enable/disable Buzzer
2.7	Date and time	Setting date and time
2.8	Email	Allows configuring the Email service

5.2.1 Metrology Management

Press the “Metrology Management” key to display the page containing the following settings:

2.1.1	Scale configuration	Inserting, removing scale and customising parameters
2.1.2	Sealing management	Type of Sealing
2.1.3	Metrological Information	Serial number, scale release, Plugin release and type-approval
2.1.4	System Information	IP address, programme code, Patch programme, Bsp, Mac address.
2.1.5	Weight Display Configuration	Display and gross weight symbol/letter
2.1.6	Metrological Events Log	Changes made to the metrological part are recorded.
2.1.7	Scale Diagnostic Config.	Setting diagnostic configuration parameters
2.1.8	Scale Diagnostics Log	Scale error list

5.2.1.1 Scale Configuration

Allows enabling and checking the scale parameters. The scales that can be selected using the add key are:
Internal, Serial, Network, EMULA S, EMULA A / EMULA D, Algebraic Sum and Configurable Sum.

5.2.1.1.1 Internal Scale

The internal scale is a Scale that uses the converter on board the indicator.
The type of scale is determined by the type of converter installed. When the internal scale is created, the programme checks the type of converter.
Select the internal scale to display eight buttons (if indicator approved) or ten buttons (if not approved).
Access to calibration (calibration procedure) depends on the type of approval. Access to the calibration key is only possible if the self-adhesive label that seals the calibration switch access hole is removed.
To create an Internal Scale click the “ADD” key and select Internal Scale:

CHARACTERISTIC PARAMETERS

Minimum weighing	Compliance with the maximum tolerated error is only assured above this weight setting.
Capacity	This is the maximum weight value that can be loaded on the scale or full scale of the instrument.
Division	This is the scale resolution expressed in the selected unit of measurement.
Unit of measurement	kg, g, t, lb,oz and tn
Legal scale	Indicates whether the scale is intended to be used for legal purposes (e.g. commercial transactions) or not.
Regulations	EURO, OIML, NTEP (indicates the selected standard)

SPECIFIC PARAMETERS

Reading time	This is the reading time of the internal scale board, it is expressed in hundredths of a second.
Conversion speed	It is active for both analogue and digital scale. In case of digital scale it refers to the cell reading speed per second (number of readings/second).
Number of cells	This is the number of cells present in the system; this parameter is present only when the cells are digital.

TARE

Tare Device	Activated	It is possible both to set the tare through acquisition of the weight on the scale or by entering a tare value directly from the keyboard
	Self-weighing only	It is only possible to set the tare through acquisition of the weight on the scale; tare values may not be entered from the keyboard.
	Preset only	Tare values may be set from the keyboard only, not by acquisition of the weight on the scale
	Deactivated	Tares may not be set either through acquisition of the weight on the scale or by entering a tare value directly from the keypad.
Multiple Tares	No	"No" indicates no additional tares.
	1.2	Indicates the number of additional tares relative to the acquired tare and the tare entered from the keypad.
Tare lock	It defines the management mode of the tare when unloading the scale.	

	OFF	Any tares set or acquired are automatically deleted when the scale returns to zero, i.e. gross weight = 0
	ON	Any tares set or acquired remain stored even when the scale has no load and therefore the gross weight = 0

ZERO

Forced zero (e)	0	Defines the division range (e) around zero within which forced zero setting will be performed on scale unloading or in the presence of a stable weight. "Scale unloading" refers to the moment when the weight falls below the minimum weighing value. On indicators subject to metrical verification, this parameter must be set to 0 (zero).
	0.25	
	0.5	
	1	
	2	
	3	
Zero track (e)	0	Defines the division range around zero within which zero tracking is performed to small gradual variations in the weight reading. Example: snow, dust, water falling on the scale. For dosing systems, set the value to 0 (zero) When zero track is disabled, even forced zero is automatically disabled.
	0.25	
	0.5	
	1	
	2	
	3	
Initial reset	Defines the indicator operating mode upon switching on.	
	Calibrated zero	Upon switching on, the instrument indicates the weight value present on the scale compared to the zero value programmed at the time of calibration.
	Auto-zero	Upon switching on, the indicator performs the auto-zero. In case of a legal instrument, the auto-zero occurs in a range between -5% and +15% of the full scale value around the calibrated zero. In case of a non-legal instrument this range varies from -50% to +50%.
Automatic Zero	ON	The indicator resets the weight if a negative weight reading remains stable for 5 seconds
	OFF	

STABILITY

Number of Stability	0	Allows setting the number of divisions by which the weight

<table>
<tr><td>Divisions</td><td>1
2
4</td><td colspan="3">may vary while the weight stable signal is maintained. On indicators subject to metrical verification, this parameter must be set to 0 (zero) or 1.</td></tr>
<tr><td>Stability Signal</td><td>Very fast (5 e)
Fast (10 e)
Slow (20 e)
Very slow (40 e)</td><td colspan="3">Speed at which the stable weight signal is displayed. Indicates how many equal consecutive readings are necessary to obtain the stable weight signal. These consecutive readings may vary according to the number of divisions indicated in the previous field. This parameter is also related to the setting of the digital filter parameter.</td></tr>
<tr><td>Digital Filter</td><td colspan="4">Allows adding or not a digital filter. It actually enables the addition or not of a software processing for filtering the output values from the analogue/digital converter. The higher the number, the greater the filtering.
<table>
<tr><td>No, 4, 8, 16, 32, 64, 128, Filter 2hz, Filter 2hz+ average, Filter 5hz+ average, Filter 5hz and ADVANCED.</td><td colspan="2">Selectable parameters, 4 additional parameters are available by setting “ADVANCED”.</td></tr>
<tr><td rowspan="4">ADVANCED</td><td>Number of values per Average</td><td>Size of averaged values table</td></tr>
<tr><td>Number of fields per average skip</td><td>Value to determine when to delete the average.</td></tr>
<tr><td>FIR Filter</td><td>no, 2Hz/60db, 5Hz/60db, 2Hz/100db</td></tr>
<tr><td>High monotony filter</td><td>Enables statistical processing on correct weight.
Do not use in case of dynamic weighing.</td></tr>
</table></td></tr>
</table>

SECONDARY PARAMETERS

Capacity (Secondary)	Capacity
Range1 Capacity (Secondary)	Range1 Capacity
Range2 Capacity (Secondary)	Range2 Capacity
Division (Secondary)	Division
Unit of measurement (Secondary)	Unit of measurement

FIELDS

Fields	Defines the number of weighing ranges into which the nominal capacity of the instrument is divided. It is possible to select:

	• **1:** the indicator has a single weighing range for the entire range of the scale capacity. • **2MD:** the indicator has two weighing ranges with MULTI-DIVISION mode [1]. • **2ME:** the indicator has two weighing ranges with MULTI-EXTENSION mode [2]. • **3MD:** the indicator has three weighing ranges with MULTI-DIVISION mode. • **3ME:** the indicator has three weighing ranges with MULTI-EXTENSION mode.
1st range capacity	Value of the capacity corresponding to the first partial weighing range.
2nd range capacity	Value of the capacity corresponding to the second partial weighing range. (in case of 3 ME or 3 MD)
W1 extension return delay (no. of conversions)	Number of calibrations of delay on return to extension W1 for multi-extension scales.
Manual range management	Possibility of selecting the ranges manually.

CALIBRATION DATA

In calibration data it is possible to view and/or edit the calibration data. The first column contains the real weight values and the second column contains the corresponding points.

(Empty Scale) Zero	Empty scale
(Maximum capacity) Full scale	Capacity
1st weight/loading intermediate points	Calibration of 1st ascending load of the linearised calibration.
2nd weight/loading intermediate points	Calibration of 2nd ascending load of the linearised calibration.
2nd weight/unloading intermediate points	Calibration of 2nd descending load of the linearised calibration.
1st weight/unloading intermediate points	Calibration of 1st descending unload of the linearised calibration.

[1] Multi-division = means that to use again the division of W1 it is mandatory to pass through 0

[2] Multi-extension = means that to use again the division of W1 it is not mandatory to pass through 0

CALIBRATION PROCEDURES

Zero Only	Zero calibration is necessary when the scale has already been calibrated and the zero value has moved when the unit switches on. This can happen when the preset tare is not known exactly at the moment of the first calibration, or when an unexpected weight is on the scale. No calibration weight needs to be available. ❖ Check that there are no weights or other materials on the scale ❖ Check that the weight is stable ❖ Press Calibrate ❖ Wait a few seconds for data acquisition ❖ Confirm if you want to accept the calibration or delete to refuse
Full Scale Zero	To be used in linear weighing systems. One or several calibration weights are required to calibrate the full scale value, or in any case a well known weight value (to perform the calibration use as much of known weight available to get as close as possible to the full scale value). It is possible to write the value of the known weight used inside the Capacity box ❖ Check that there are no weights or other materials on the scale ❖ Check that the weight is stable ❖ Press Calibrate to calibrate the zero ❖ Wait a few seconds ❖ Change the “Capacity” field by entering the known weight or span value you want to use to calibrate the scale ❖ Place the known weight or span weight on the scale and wait for the system to stabilise ❖ Press the Calibrate button ❖ Wait a few seconds for data acquisition ❖ Confirm if you want to accept the calibration or delete to refuse
Linearised 1 PT	At least 2 span or known weights are required for linearised calibration at one point, one for calibration the intermediate value and the other for calibration the full scale value. The calibration procedure is the same as that used by the full scale zero system, but in this case several points must be calibrated.
Linearised 2 PT	At least 3 span or known weights are required for linearised calibration at two points, one for calibration the 1st intermediate value, the second for calibration the 2nd intermediate point and the 3rd for calibration the full scale value. The calibration procedure is the same as that used by the full scale zero system, but in this case several points must be calibrated.

Hysteresis Linearisations To be used in systems with a hysteresis. Aside from calibration zero and the full scale value, it also spans different intermediate points for the ascent and descent of the Real weight/Measured weight curve.	
Hysteresis Linearis.	At least 2 span weights are required for the hysteresis correction at 1 point, one for calibration the 1st intermediate point, and the other to add to the first for

1 PT	calibration the full scale value. Removing the weights in inverse order spans the descent. The calibration procedure is the same as that used by the full scale zero system, but in this case several points must be calibrated.
Hysteresis Linearis. 2 PT	At least 3 span weights are required for the hysteresis correction at two points, one for calibration the 1st intermediate point, the second to add to the 1st for calibration the 2nd intermediate point, the third to add to the first two for calibration the full scale value. Removing the weights in inverse order spans the descent. The calibration procedure is the same as that used by the full scale zero system, but in this case several points must be calibrated.

Reverse Execution	Inverse calibration can be useful in some cases when it is difficult to load and unload the known weight from the weighing device, for example in hoppers or batching systems.
Correction	It allows correcting the scale calibration, without re-spanning, knowing the error made at the maximum capacity; set the value you want to add with sign (e.g.: the weight excess is 200 kg, set -200).
Estimated Calibration	It allows calibrating the scale by entering characteristic data of the scale/cells. ATTENTION this is not a real calibration and the scale may not weigh correctly. Number of cells — Number of cells Capacity (kg) — Maximum Scale Capacity Max. cell capacity (kg) — Nominal single cell capacity Initial tare (kg) — Structure Tare
Decentralised load	Better known as angle turn, it allows addressing and calculating the slope for every single cell through wizard. There are 2 methods to perform the angle turn: Sort by side — The angle turn is performed first on the odd cell side and then on the even cell side Sort by cell number — The angle turn is performed in numerical order from cell number 1 to the final cell Procedure — Unload the scale, only when the scale is unloaded press Calibrate; Select one of the 2 methods between sort by address or by side and calibration to continue. Now check on the screen on which cell the weight is to be placed, place the weight on it (the minimum weight must be calculated in this way $\frac{portata\ max\ pesa}{(N^{\circ}\ celle-1)}$) and press Calibrate, wait a few seconds and proceed in the same way in the order shown by the indicator. At the end of the procedure the indicator prompts to continue by pressing the Calculate Coefficients button. Once the coefficients are shown on the display, it is possible to confirm and save or delete the procedure. If the coefficients are within the default ranges, the indicator shows a message indicating the correct angle calibration, otherwise

	the indicator shows a message of incorrect angle calibration.
Replacing the cell	Procedure to replace one cell inside the plant. When a cell is replaced within a system consisting of more than one digital cell, the indicator detects the change and displays an error (-07-). This error can be corrected using the cell replacement procedure. It consists in recalculating, by internal operation, the coefficient of the replaced cell using the immediately opposite cell as reference. The slope for the replaced cell can be calculated without repeating the calibration for all the other cells. The first operation to do is data acquisition with the scale unloaded (dead load). Place the load on the replaced cell and then on the opposite cell shown by the indicator and confirm by pressing the appropriate keys. At the end of the procedure press Confirm to save the data. The data is automatically saved in the indicator and in the digital cells; just go back to the main page to view the weight again.
Cell Coefficients	Allows viewing the data stored on the cells and in the Scale board. Using the 'Copy from Scale to Cells' button it is possible to overwrite the data inside the cells with the data on the scale board. With the 'Copy from Cells to Scale' button it is possible to overwrite the data on the Scale board with the data on the cells. Confirm to save the data. !!ATTENTION!! If the instrument is not approved, it is possible to manually correct the slopes on the Scale board. (consider the min and max values when using this method)

SYNCHRONISE

In an analogue system the calibration parameters and configuration data of the scale are stored on the scale board. The software on the core also creates a copy of these data and saves it in the system folders. Therefore, in case of replacement of one of the two parts, it is possible to retrieve the scale data. In case of digital system, in addition to the two parts mentioned above, data relating to Calibration only are stored in the load cells. For data synchronisation, follow the instructions below:

Restore Parameters	It allows restoring the previous parameters in case of scale board replacement. It retrieves the data from the System/scales folder and saves them inside the scale board.
Scale board serial number-update	It updates the serial number of the board on the indicator. It aligns the serial number of the scale board on the indicator with the number on the scale board.
From CELLS to SCALE	It allows retrieving calibration parameters from the cells, and saving them in the indicator
From SCALE to CELLS	It allows transferring calibration parameters from the indicator to the cells.

PROTECTION
The created scale management page contains a protection option.
Select “PROTECTION” to activate an additional software protection to control access in the scale management page. To temporarily remove the protection, use your annual password.

5.2.1.1.2 Serial Scale

The serial scale (serial weight repeater) is a scale not present on board the indicator. It allows repeating the weight of a scale, which can be found several metres away, through the input string configuration.
To create a serial weight repeater, click on “ADD” and select Serial Scale:
Select the serial scale settings:

Protocol	It allows selecting in the desired scale among those available which string the indicator is waiting for input. It is possible to choose among the following: EXTENDED, CB, CMA, GIBERTINI, METTLER, SARTORIUS, FULGOR, MT8530, MTBBA462, WW-P/C100
Serial port	It allows selecting the port on which the indicator will receive the string: COM4, COM6 etc.

When communication protocol and serial port have been defined, it is possible to set the repeater scale:

Extended	Dialogue	It is possible to select Half-Duplex, i.e. the scale can be managed only from the main indicator or Full-Duplex, thus allowing to manage, for example, the reset of the scale also from repeater.
	Type of scale	Single in case of full duplex dialogue, sends the commands, for example for reset, to the single scale present in the main indicator. Duplex-A, Duplex-B etc. : If the full- duplex dialogue is selected and the main indicator has more than one scale, this parameter is essential to determine to which of the scales the reset command, for example, must be sent.
	Division	Scale Division
	Automatic Printing	Not used
	COM	Repeater scale connection port
	Fields	Number of scale fields
	Capacity	Scale Capacity
CB	Unit of measurement	Select the unit of measurement from: kg, g, t, lb, oz, tn
	Division	Select the unit of measurement of the scale

	COM	Repeater scale connection port
CMA	Number of the indicator to be queried	Set the number of the indicator from which the weight is requested
	Number of repeater indicator	Set the number of the indicator on which you are working, i.e. the weight repeater
	Number of indicators	Indicates the number of indicators from which you want to use the weight to make a sum. (special application) Indicate 1 as default.
	Reading time (1/100s)	Reading time, expressed in hundredths of a second, of the main scale.
	Enable reset	Allows resetting the weight of the scale to zero even from the repeater.
	Enable self-weighted tare	Allows acquiring a self-weighted tare from the repeater indicator
	Enable preset tare	Allows using a preset tare from the repeater indicator
	Automatic printing	This function cannot be used
	COM	Repeater scale connection port
Gibertini	Capacity	Indicate the maximum capacity of the Scale
	Division	Indicate the division used for the Scale
	Unit of measurement	Indicate the unit of measurement used by the Scale among kg, g , lb , oz, t, tn
	Tare activation	Select how the Tare is acquired from the Scale among Enabled, Self-weighing only, Preset only, Disabled
	Tare value maintenance	Indicate whether the tare must be maintained also for subsequent weighing operations
	COM	Repeater scale connection port
Mettler/MT8530/MTBBA462/WW-P/C100	Capacity	Indicate the maximum capacity of the Scale
	Division	Indicate the division used for the Scale
	Unit of measurement	Indicate the unit of measurement used by the Scale among kg, g , lb , oz, t, tn
	Tare activation	Select how the Tare is acquired from the Scale among Enabled, Self-weighing only, Preset only, Disabled

	Tare value maintenance	Indicate whether the tare must be maintained also for subsequent weighing operations
	COM	Repeater scale connection port
Sartorius	Capacity	Indicate the maximum capacity of the Scale
	Division	Indicate the division used for the Scale
	Unit of measurement	Indicate the unit of measurement used by the Scale among kg, g , lb , oz, t, tn
	Tare activation	Select how the Tare is acquired from the Scale among Enabled, Self-weighing only, Preset only, Disabled
	Tare value maintenance	Indicate whether the tare must be maintained also for subsequent weighing operations
	COM	Repeater scale connection port
Fulgor	Capacity	Indicate the maximum capacity of the Scale
	Division	Indicate the division used for the Scale
	Unit of measurement	Indicate the unit of measurement used by the Scale among kg, g , lb , oz, t, tn
	Tare activation	Select how the Tare is acquired from the Scale among Enabled, Self-weighing only, Preset only, Disabled
	Tare value maintenance	Indicate whether the tare must be maintained also for subsequent weighing operations
	COM	Repeater scale connection port
PGE_EHP	PGE_EHP Indicator No.	Number of the indicator to be queried.
	PGE_EHP Channel No.	Channel number
	COM	Repeater scale connection port

It is possible to configure the selected COM port directly from this page, simply by clicking on the relevant COM Configuration key.

5.2.1.1.3 Network scale

The network scale (weight repeater via Ethernet network) is a scale that is not present on board the indicator. It allows repeating the weight of a scale, among those selectable, which is within the same network through a preset communication protocol.

To create a network scale click on the “ADD” button on the scale display page.
It is possible to have up to 2 internal scales and 4 total scales (e.g. 2 in the network and 2 internal or 4 in the network)

Then select Network Scale and set the following parameters:

IP address	Enter here the IP address of the main indicator, i.e. whose weight you want to repeat.
Port	The default port is 5001, do not change it.
Remote Scale name	It is possible to choose which scale to repeat simply by writing its name in this box.
Protocol	The communication protocol between indicators is XML, it cannot be changed.

Save and return to the weighing page to check that the network scale has been created.

Attention: the specific settings of each weighing instrument must be made through the instrument to which the scale is connected, they cannot be performed using network infrastructure.

5.2.1.1.4 Sum Scale

The sum scale allows creating a scale where the weight is given by the sum of the weighing platforms indicated.
To create a sum scale, press “ADD”, select “standard sum scale” and select which scales you want to sum up.

Attention: the system is able to create and manage one single sum scale, therefore it is not possible to create more than one sum scale (simple or configurable).

The Scale 'S' (sum) is then displayed, select it to view the following data:

SPECIFICATIONS

Number of sums per second (if 0 is the sum at each conversion)	Default value 10, indicates how many times the sum is calculated per second. It is closely related to the reading time of the converter of the summed scales.
Stability on the sum	Indicate how you want to obtain the stable weight signal: sum scales, i.e. the stability signal is indicated when both scales are stable; internal, i.e. the stability signal is indicated only if the stability parameters of the sum scale are respected
Sum scale tare	Indicate how the tare must be acquired by the sum scale: sum scales, i.e. use the tares set by the scales used to create the sum; internal, i.e. use the tare set by the sum scale
Tare maintenance	Indicate whether the tare must be maintained also for subsequent weighing operations

STABILITY

Number of Stability Divisions	0	Allows setting the number of divisions by which the weight may vary while the weight stable signal is maintained. On indicators subject to metrical verification, this parameter must be set to 0 (zero) or 1.
	1	
	2	
	4	
Stability Signal	Very fast (5 e)	Speed at which the stable weight signal is displayed. Indicates how many equal consecutive readings are necessary to obtain the stable weight signal. These consecutive readings may vary according to the number of divisions indicated in the previous field. This parameter is also related to the setting of the digital filter parameter.
	Fast (10 e)	
	Slow (20 e)	
	Very slow (40 e)	
Digital Filter	No	Allows adding or not a digital filter. It actually enables the addition or not of a software processing for filtering the output values from the analogue/digital converter.
	4	
	8	

	16	The higher the number, the greater the filtering.
	32	
	64	
	128	

SUM PARAMETERS

A, B, C...	Indicates which of the scales present are used to create the sum scale

5.2.1.1.5 Configurable Sum Scale

In the "Configurable sum scale" version, the sum result is processed as an additional scale with its own characteristics (capacity, division, zero management, tare management, etc.).
To create a configurable sum scale, press "ADD", select the configurable sum scale and confirm.
Select which scales are used to create the sum scale by double-clicking on them.
The Scale 'S' (sum) is then displayed, select it to view the following data:

CHARACTERISTICS

Minimum weighing	See definition on page 31, chapter 5.2.1.1.
Capacity	See definition on page 31, chapter 5.2.1.1.
Division	See definition on page 31, chapter 5.2.1.1.
Unit of measurement	See definition on page 31, chapter 5.2.1.1.
Legal scale	See definition on page 31, chapter 5.2.1.1.
Regulations	See definition on page 31, chapter 5.2.1.1.

SPECIFICATIONS

Number of sums per second (if 0 is the sum at each second)	Default value 10, indicates how many times the sum is calculated per second. It is closely related to the reading time of the converter of the summed scales.
Full scale control on each scale	If enabled, a full scale control is performed on each scale used to make the sum scale. This control is performed to avoid overloading the scales.
Zero enabled on all scales	If enabled, it allows zeroing the scale in addition to the sum scale itself, the scales used for the sum scale, if and only if, they are within the reset range.

TARE

Tare Device	Activated	It is possible both to set the tare through acquisition of the weight on the scale or by entering a tare value directly from the keyboard
	Self-weighing only	It is only possible to set the tare through acquisition of the weight on the scale; tare values may not be entered from the keyboard.
	Preset only	Tare values may be set from the keyboard only, not by acquisition of the weight on the scale
	Deactivated	Tares may not be set either through acquisition of the weight on the scale or by entering a tare value directly from the keypad.
Multiple Tares	No	"No" indicates no additional tares.
	1.2	Indicates the number of additional tares relative to the acquired tare and the tare entered from the keypad.
Tare lock	It defines the management mode of the tare when unloading the scale.	
	OFF	Any tares set or acquired are automatically deleted when the scale returns to zero, i.e. gross weight = 0
	ON	Any tares set or acquired remain stored even when the scale has no load and therefore the gross weight = 0

ZERO

Forced zero (e)	0	Defines the range around zero within which forced zero setting will be performed on scale unloading or in the presence of a weight stable signal. "Scale unloading" refers to the moment when the weight falls below the minimum weighing value. On indicators subject to metrical verification, this parameter must be set to 0 (zero).
	0.25	
	0.5	
	1	
	2	
	3	
Zero track (e)	0	Defines the range around zero within which zero tracking is performed to small gradual variations in the weight reading. Example: snow, dust, water falling on the scale. For dosing systems, set the value to 0 (zero) When zero track is disabled, even forced zero is automatically disabled.
	0.25	
	0.5	
	1	
	2	
	3	
Initial reset	Defines the indicator operating mode upon switching on.	
	ZEROCAM	Upon switching on, the instrument indicates the weight value present on the scale compared to the zero value programmed at the time of calibration.
	AUTOZ	Upon switching on, the indicator performs the auto-zero. In case of a legal instrument, the auto-zero occurs in a range between -5% and +15% of the full scale value around the calibrated zero. In case of a non-legal instrument this range varies from -50% to +50%.
	Memorized Zero	Upon switching on, the instrument indicates the weight value present on the scale compared to the zero value set while pressing the zero button in the weigh screen.
Automatic Zero	ON	The indicator resets the weight if a negative weight reading remains stable for 5 seconds
	OFF	

STABILITY

Number of Stability Divisions	0	Allows setting the number of divisions by which the weight may vary while the weight stable signal is maintained. On indicators subject to metrical verification, this parameter must be set to 0 (zero) or 1.	
	1		
	2		
	4		
Stability Signal	Very fast (5 e)	Speed at which the stable weight signal is displayed. Indicates how many equal consecutive readings are necessary to obtain the stable weight signal. These consecutive readings may vary according to the number of divisions indicated in the previous field. This parameter is also related to the setting of the digital filter parameter.	
	Fast (10 e)		
	Slow (20 e)		
	Very slow (40 e)		
Digital Filter	Allows adding or not a digital filter. It actually enables the addition or not of a software processing for filtering the output values from the analogue/digital converter. The higher the number, the greater the filtering.		No
			4
			8
			16
			32
			64
			128

SECONDARY

Capacity (Secondary)	Capacity
Range1 Capacity (Secondary)	Range1 Capacity
Range2 Capacity (Secondary)	Range2 Capacity
Division (Secondary)	Division
Unit of measurement (Secondary)	Unit of measurement

FIELDS

Fields	Defines the number of weighing ranges into which the nominal capacity of the instrument is divided. It is possible to select: **1:** the indicator has a single weighing range for the entire range of the scale capacity. **2MD:** the indicator has two weighing ranges with MULTI-DIVISION mode [3]. **2ME:** the indicator has two weighing ranges with MULTI-EXTENSION mode [4]. **3MD:** the indicator has three weighing ranges with MULTI-DIVISION mode. **3ME:** the indicator has three weighing ranges with MULTI-EXTENSION mode.
Range1 Capacity	Value of the capacity corresponding to the first partial weighing range.
Range2 Capacity	Value of the capacity corresponding to the second partial weighing range. (in case of 3 ME or 3 MD)
W1 extension return delay (no. of conversions)	Number of calibrations of delay on return to extension W1 for multi-extension scales.
Manual range management	Possibility of selecting the ranges manually.

SUM PARAMETERS

A, B, C...	Indicates which of the scales present are used to create the sum scale

[3] multi-division = means that to use again the smallest division it is necessary to return within the first weighing range
[4] multi-extension = means that to use again the division of W1 it is mandatory to pass through 0

5.2.1.2 Seal management

Allows you to set the standard and the type of print.

STANDARD	
Not Legal	It allows deciding whether the scale is to be used for legal purposes (e.g. commercial transactions with check of the competent metric inspector), or for internal purposes. When enabled, it is not possible to change sensitive data about the scale unless the hardware or software metric seal is removed. If the indicator is approved, it is possible to display the data but not change them. When one of the standards is applied, it is shown on the main scale configuration page.
European	Type of compliance valid for the European Community
International	International type of compliance
USA	Type of compliance valid for the USA (NTEP)
TYPE OF PRINT	
Hardware	The calibration button temporarily disables the operation in legal mode. To temporarily disable print, enter the Scale Configuration page and press the calibration button. When the indicator is sealed, the page has a red background, once the seal is removed it turns white.
Software	The metrological password temporarily disables the operation in legal mode. To temporarily disable printing, enter the seal management page and press the icon 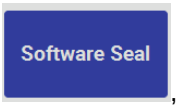 , then the page for entering the metrological password will open.

5.2.1.3 Metrological information

Allows consulting the metrological information.

Serial number	Indicator serial number (protected by metrology)
Scale firmware	ID, Programme checksum release
Metrological modules	Metrology software release and checksum
Seal Status	Current status of the seal and counter of metrological parameter accesses

5.2.1.4 System Information

IP address	IP address of the indicator
Software	Programme code and release
Patch	Patch code for BSP (if any)
BSP	BSP code, release and date and GPIO release
MAC	Physical address of the indicator

5.2.1.5 Display Configuration

Gross weight symbol	This parameter allows setting the Letter "B" or "G", an indication used to indicate gross weight.

5.2.1.6 Metrological Events Log

List of changes made to metrological parameters.

5.2.1.7 Scale Diagnostics Configuration

<table>
<tr><td>Scale Statistics</td><td>It records the number of times the weight loaded on the scale exceeds the minimum weighing value. It is possible to view the data from Scale Diagnostics Log, and a file is also generated in the system/statistics folder that replicates the same data.</td></tr>
<tr><td>Scale Diagnostics</td><td>Enables/disables a Log file (e.g. 'diagerrorlog_1_000001.txt') that records the scale events. It is saved in the default Extern folder. The report file is coded as follows:

Date and Time
Separator ' ; ' (semicolon)
Scale board number 1, 2, 3, 4 involved
Separator ' ; ' (semicolon)
C1,C2,C3, ... , Cn = Cell number
or Bil = Scale involved
Separator ' ; ' (semicolon)
ERROR TYPE
* Scale/Cell not connected
! Scale/Cell not connected occasionally
C Scale/Cell not configured
M Scale/ Cell serial number error
V Scale/Cell voltage error
T Scale/Cell temperature error R
Reset cells (if Bil)/cell (if Cn) W
Warmup
O Overload
I I2C internal bus error
Separator ' ; ' (semicolon)
Possible value</td></tr>
<tr><td>Log Folder</td><td>Allows selecting where to store the scale Diagnostics file. It is possible to choose different sources including extern, USB or SD card.</td></tr>
</table>

5.2.1.8 Scale Diagnostics Log

The scales on which the statistical survey is active are displayed.

Year	Editable field to select the reference year of the statistics to be displayed
Total Number Of Loads	Number of times the weight loaded on the scale exceeds the minimum weighing value
Total Number Of Days	Number of days in which the minimum weighing value has been exceeded at least once
Number Of Days Exceeding xxx loads	Editable threshold, used to determine the number of days that exceed the specified number of loads per day. Enter the number of loads per day after which the day is signalled.
	The result is the number of days in which the number of loads entered has been exceeded
Delete Statistics	Delete statistics file
Scale Events	Records abnormal scale events
Detail	Displays date and number of respective loads

5.2.2 Serial Ports

From this page it is possible to set the serial transmission parameters of the COM ports.
The COM ports that are always physically present are: COM4, COM6 and COM7.
If an optional serial expansion board is installed the COM ports are: COM8 and COM9.
Instead a possible USB/Serial port converter uses COM higher than 10.
Always save the configuration before exiting if some parameters have been changed.

The editable features for each COM are:

baud rate	4800
	9600
	19200
	38400
	115200
Bits	7
	8
Stop bits	1
	2
Parity	No
	Even
	Odd
Handshake	No
	Hardware (COM4 and COM8)
	Xon/Xoff (COM6, COM8 AND COM9)
Protocol	RS232 (on: COM4, COM6, COM8 and COM9)
	RS422 (on: COM7 snd COM9)

5.2.3 Printers/Readers/IOs

Press the "Printers/Readers/IOs"  key to access the settings area of the following components:

System	Axle management	Strictly related to the activation of the service. It cannot be used if the axle management service has not been activated from the relevant menu. For configuration, follow the instructions in chapter 5.2.3.1 Axle Management.

<table>
<tr><td></td><td>System Memory</td><td>Service that checks the internal memory use and signals when the set limits are exceeded.
<table>
<tr><td>Memory almost full</td><td>Set at what percentage the memory almost ful signal must be activated.</td></tr>
<tr><td>Memory full</td><td>Set the percentage at which the memory is considered full.</td></tr>
<tr><td>Memory check time</td><td>Allows setting the check interval.</td></tr>
<tr><td>Displays alarm messages</td><td>Enables the display of messages.</td></tr>
</table></td></tr>
<tr><td rowspan="4">Inputs / Outputs</td><td>Inputs</td><td>2 internal inputs and, if an optional board is installed inside the Skynet indicator, it is possible to view the additional inputs available. It is possible to choose to use the normally open or normally closed input.</td></tr>
<tr><td>Outputs</td><td>2 internal outputs and, if an optional board is installed inside the Skynet indicator, it is possible to view the additional outputs available. It is possible to choose to use the normally open or normally closed output.</td></tr>
<tr><td>Range</td><td>Select Range through the  key to add a fully customizable weight range.
<table>
<tr><td>Output number</td><td>Shows a list of available outputs.
Define here which output will be activated.</td></tr>
<tr><td>Scale alias</td><td>Shows the list of selectable scales.
Define here on which scale the range will be applied.</td></tr>
<tr><td>Lower threshold</td><td>Editable range expressed in the unit of measurement selected by the system.
Enter a numerical value to define the minimum weight threshold after which the selected output will be activated.</td></tr>
<tr><td>Upper Threshold</td><td>Editable range expressed in the unit of measurement selected by the system.
Enter a numerical value to define the maximum weight threshold after which the selected output will be deactivated.</td></tr>
<tr><td>Type of weight</td><td>It is possible select the type of weight to activate the output.
Net Weight or Gross Weight only.</td></tr>
<tr><td>Update time</td><td>Indicates how often (ms) the weight is checked.</td></tr>
<tr><td>Disabling input</td><td>It is possible to select an input to deactivate the range operation.</td></tr>
</table></td></tr>
<tr><td>Setpoint</td><td>Select Setpoint through the  key to add a fully customizable setpoint.
<table>
<tr><td>Output number</td><td>Shows a list of available outputs.
Define here which output will be activated.</td></tr>
<tr><td>Scale alias</td><td>Shows the list of selectable scales.
Define here on which scale the setpoint will be applied.</td></tr>
<tr><td>Type of threshold</td><td>Indicates when to activate the output, i.e. if the weight is:</td></tr>
</table></td></tr>
</table>

<table>
<tr><td></td><td></td><td>
<table>
<tr><td></td><td>• Weight ≤ setpoint
• Weight < setpoint
• Weight > setpoint
• Weight ≥ setpoint</td></tr>
<tr><td>Timeout</td><td>Time, expressed in seconds, after which the output is activated</td></tr>
<tr><td>Threshold</td><td>Editable field to enter the weight value. The system uses the unit of measurement adopted by the scale.</td></tr>
<tr><td>Type of weight</td><td>It is possible select the type of weight to activate the output. Net Weight or Gross Weight only.</td></tr>
<tr><td>Update time</td><td>Indicates how often (ms) the weight is checked.</td></tr>
<tr><td>Disabling input</td><td>It is possible to select an input to deactivate the setpoint operation.</td></tr>
</table>
</td></tr>
<tr><td>Printers</td><td>Printers</td><td>Select Printers through the  key to add a printer to the indicator.
The models currently available on the indicator are:
• Italora
• Epson LX300
• TM295
• TM300 & TM220
• TPT60S4
• STB80
• STB60
• STB112
• VKP80II
• Zebra
• PLUS
• Qseries
After selecting the printer, its settings are loaded.
Press  to access the customization section specific for each printer (paper cutting, line feed, etc.).
After setting the printer, it is possible to select the COM port on which it will interface. The COM ports available depend on the indicator and the optional boards used.
We suggest for the following terminal to connect the printer on COM4 (if Handshake Hardware) or COM6 (if Handshake Xon / Off).</td></tr>
<tr><td>Readers</td><td>Readers</td><td>Select Readers through the  key to add a reader to the indicator.
The models currently available on the indicator are:
• Gigatek
• Coges
• DEISTER
• DEISTERPLUS
• HF0450
• HID
• Tirfid</td></tr>
</table>

		• Transit • Vecos • GenericReader (used to directly read the reader data as they are without interpreting them) Then select a COM port to which the reader will be connected.

5.2.3.1 Axle Management

For proper axle detection operation, attention must be paid to the indicator configuration. An incorrect or superficial configuration can compromise its operation. We remind the technician and the end user that the truck, to allow a correct weighing axle detection of all axles, must proceed at a speed not exceeding 5 km/h. When axle weighing is activated, the first parameter to be set to make the operation effective is the reading time. Follow this path to find the parameter:
Menu/Tools/Configuration/System/Metrology Management/Scale Configuration/Select the scale on which you want to activate the specific Axle/Parameter weighing:
Reading time = 50 current ⇨ Reading time = 5
After changing this parameter, save and configure the Axle Management section.
Axle management can be found in the Printers / Readers / IOs section, to create the management for the scale select the axle management item and press  :

Next axle detection threshold	Set a weight value (expressed in the unit of measurement of the scale), above which the weight must vary to acquire the next axle. Example: the truck goes on the scale and the weight detection starts; the initial weight, i.e. of the first axle is 7500 kg, if the weight varies by 200 kg (value entered as threshold) the software acquires the next axle. If the weight variation is below the threshold, the axle is not acquired. There is no default parameter, this value must be determined in the field, as it also depends on the quality of the mechanical installation and mechanical application (in pit or on ramps).
Average	This parameter defines the number of weight values to average; with average 1 all the about 20 values/second are sent, to lower the noise of the readings it is possible to increase the average value. Possible values 1/2/3/4. Set as default 1. If a value greater than 1 is selected, the speed of the truck must be reduced.
Wheel detection limit	Not used
Wheel management	Not used
Max axle weight	Set a maximum axle weight threshold (expressed in unit of measurement of the scale). If the weight of an axle exceeds this threshold value, an axle overload is signalled in the printout with an "*". Default = 20000
Truck end time	Time, expressed in seconds, indicating when the end of the truck is determined. The truck end time count starts when the axle is detected, if no other axes are detected within this time threshold the software ends the data acquisition.
Loading detection start threshold	Value expressed in divisions, above which the software starts detecting the rising axle (starting from unloaded scale).

Unloading detection start threshold	Value expressed in divisions, above which the software starts detecting the lowering axle (starting from loaded scale). This application is used, for example, in cases where the truck is filled when it is on the scale.
Output number	Currently not managed
Scale alias	Indicate on which scale you want to detect the axes
Axle weighing	Enables or disables axle weighing
Type of weighing	Defines how to use axle detection: • scale input • scale output • always

5.2.3.2 System Memory

Service that checks the internal memory use and signals when the set limits are exceeded.

Memory almost full	Set at what percentage the memory almost full signal must be activated.
Memory full	Set the percentage at which the memory is considered full.
Memory check time	Allows setting the check interval.
Displays alarm messages	Enables the display of messages.

5.2.4 Log Management and System Errors

5.2.4.1 Error notification

Allows managing the Managed Framework Log generated by the device.

GENERAL

Log level per file	Allows choosing the kind of errors to store. TRACE = 0 — Additional information log for service DEBUG = 1 INFO = 2 WARNING = 3 — warning log ERROR = 4 — error log FATAL = 5 — log of system blocking errors only Select the desired type of signal, by default it is "ERROR".
Displayed log level	Allows selecting which types of errors to display, it is possible to select "ERROR", "WARNING" or "FATAL".
Display manager	Allows selecting on which "object" to display the errors; by default a window is selected which, in case of error, is overwritten on the work page and in which the error is displayed.
Log file path	Allows selecting where to store the error file "Log file", by default it is in the memory of the indicator "\NAND_Flash". It is also possible to select another media, e.g. a USB stick.

EMAIL

Enables email notification	If enabled, it allows sending an e-mail from the indicator to different recipients.
Email log level	Allows choosing which error level to send by email: • ERROR • WARNING • FATAL
Mail to	Write here the addresses of the recipients
Mail Cc	Write here the addresses of copy recipients
Mail blind cc	Write here the addresses of hidden copy recipients

To enable the sending of emails from the indicator, refer to the settings on page of paragraph

5.2.4.2 Device log

Allows selecting the saving location of the Log files generated by the Native Framework of the device. Available:
4 Hard Disks, 1 Storage Card, 1 nano flash (internal memory of the device).

5.2.5 Access levels

The use of access passwords allows limiting the setting and/or deletion of sensitive data by unauthorised personnel. To activate them press the enable button next to the access level wording. Then define the initial access level.
To check the functions available for each level, see the following tables:

Scale:

Operation	Level
Weighing operation	1
Resetting weight	1
Acquiring\Deleting tare	1

Archives:

Operation	Level
Selecting items for weighing operations	1
Sorting	1
Searching	1
New item	2
Deleting	3
Modification	3

CSV:

Operation	Level
Exporting	1
Importing	3

Tools:

Operation	Level
Activating utilities	1
Selecting colour	1
Setting up shortcut keys	1
Stand-by	1
Error management	1
Setting date and time	3
Device configuration	4

To change level, when they are active, click the ‘Access Levels’ icon , select the desired level and enter the password.

5.2.6 Buzzer

There is a buzzer inside the Skynet indicator that triggers when an icon is selected.

Enable buzzer	ON	Enable buzzer every time you press the screen
	OFF	Disable buzzer

5.2.7 Date and time

The Skynet indicator contains a calendar clock kept active by the buffer battery installed on the motherboard. If the battery charge level falls below the minimum usage threshold, the calendar is not synchronised.

To Change Date / Time from Home select:

 ’Menu’  ‘Tools’  ‘Configuration’  ‘System’  ‘Date and Time’

the general setting page is displayed, which contains 3 buttons:



- to change the date press: 
- to change the time press: 
- to activate synchronisation with the internet press: 

5.2.7.1 Changing the date:



5.2.7.2 Changing the time:

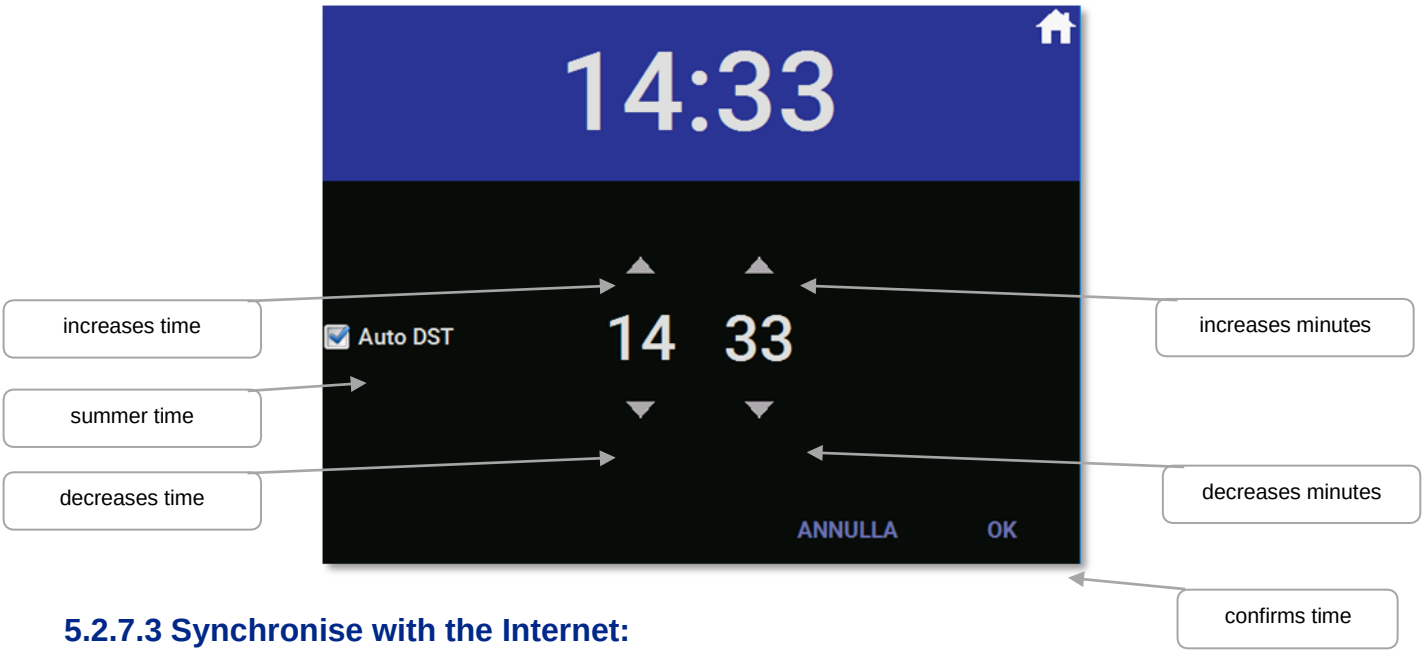

5.2.7.3 Synchronise with the Internet:

No dedicated page is displayed, the function immediately synchronises the internal clock with an internet server, there are no subsequent synchronisations, the function is one-shot and is activated only when requested with the key.

5.2.8 Email

The email service is configured in this menu. The Skynet indicator is able to send emails using an existing email address. Check the data before entering them and make sure to have the necessary permissions to allow external programmes to connect to your email server. The data to be entered are:

SMTP server address or name	Server address for outgoing email (e.g smtp.xxx.com)
Port	The default port for unprotected mail is 25, in some cases it is changed. Select the port according to the server and specifications indicated.
Sender name displayed	Enter the name that will be displayed as email sender.
User name	User name used to access your email server.
Password	Password used to access your email server.
SSL	If required by the server, it is possible to activate the email encryption service.

The email service settings vary depending on the email server used, make sure to have all the necessary information before filling out this page. In case of error or failure to send the email, consult the error LOG called MF_ErrorLOG.txt, contained in the Extern folder of the device selected for storing the logs.

5.3 Cards

The Skynet indicator has the possibility to interface with different readers, the available readers are listed on page 58 paragraph 5.2.3.

Type of card	Cb	The "CB" coding is used in the badge cards supplied by Cooperativa Bilanciai; these cards are composed in such a way as to have an initial check digit which allows the master indicator to prevent the weighing to all badges which do not have an initial check digit equal to that established during the card initialisation phase.
	Neutral	Neutral encoding allows the management of various cards, which is why the master indicator, in this case, allows choosing whether to accept all the characters of the card or only accept characters from - to, the terminator character must be “CR”.
	Tax Code	The "Tax Code" coding allows managing the tax codes on the health card. It uses the data read in the barcode of the card. (used in special applications)
	Encoded Tax Code (32 characters)	The "Encoded Tax Code" coding allows managing the tax codes on the health card. It uses the data read in the band strip of the card. (used in special applications)
Timeout(sec)	Indicates the pause time between code readings.	
Time interval	Enable or disable the timeout (interval) between readings.	
Length	Length of the code that will be read by the reader.	
From position	It is possible to indicate from which digit the barcode is to be read; the first character or digit corresponds to the position 0 (zero).	
Automatic weighing operation	Enable or disable automatic printing immediately after the card acquisition by the reader.	
Initial control code	It allows defining the initial code from which the transcoding will start. All badges that do not meet this characteristic are not accepted. Only used in "CB” code types. (example: initial check digit 8)	
Creating input weighing operation with card	Enable or disable the creation of an input RCD by passing a card with code not associated with an operation. Using the same card it is possible to carry out the output weighing. The RCD archive must be configured for operation with alphanumeric codes or plate.	

At the end of the card encoding settings, it is possible to check its operation from the test area; use the configured reader to read the card, the indicator will simply display the code read. Otherwise, check the settings of the reader and cards.

5.4 PDF and network printer

To enable a network printer or create a PDF file, an activation key is required, which must be requested from Cooperativa Bilanciai. Each key is unique and linked to the physical manufacturing specifications of the indicator, so it is not possible to use the code to activate several services and/or the same service on other indicators that support it. To request activation codes, always provide:

- Indicator serial number
- Receipt confirming payment for service activation
- Code provided by the indicator when you want to activate the service

To acquire the code provided by the machine, go to the “INSTRUMENTS” section and click on the following

'Activating utilities’ icon , select the desired service and press the off button once. A page opens, which shows the code required to activate the service.
Once the code is saved, it is possible to resume normal operation of the indicator. To activate the service, go back to the activation section, click once on the off button and enter the code received. The activated services are linked to the indicator, they are not lost in case of indicator software update.
If Core is replaced, it is necessary to reactivate the services; contact the Cooperativa Bilanciai for information on the procedures

5.4.1 Network printer

This feature allows the indicator to use a network printer as indicator main or secondary printer. The Skynet indicator is able to use printers connected to the network to print the weight. To use this function, proceed as follows:

- Check that the service is active, otherwise it is not possible to create a network printer
- Go to the PDF-Network Printer section
- Select Network Printer
- Click on ‘Add’  and enter the printer name

The parameters to be set are:

IP address	Set the IP address of the printer you want to use	
Port	Enter the printer communication port address (9100 standard)	
Type of printer	Select a driver from the list according to the printer used: • Canon BJ 300 dpi • Canon BJ 360 dpi • Canon iP90 • HP PCL 5e • HP PCL 3 • Amtech • Epson ESC/P 2 • Epson LX (9-pin) • Epson Stylus Color • M1POS • MP-300 • MTE W40 • O'Neil 3 inch • O'Neil 4 inch • PocketJet 200 • PocketJet II • SP-T8 • Zebra	
Colours	Monochrome	Black and white printing
	3 colours	Print using the following colours: blue, magenta, yellow
	4 colours	Print using the following colours: black, blue, magenta, yellow
Printer drivers	Default, non-replaceable parameter.	

When the configuration is finished, save the settings and go to the APPLICATION >> OTHER>> PARAMETER CONFIGURATION>> MAIN PRINTER section to set the network printer as main or secondary printer.
Check the operation by printing a weight from the main page. If printing is not performed, check the following parameters:

- Network printer IP address
- Check the Skynet indicator network settings (to access another company sub-network it is necessary to specify the default gateway)
- Check the drivers used by the printer, if it is not present in the list of the indicator, contact the service department
- Make sure you have selected the network printer as main or secondary printer and enabled its use

5.4.2 PDF

This function allows the indicator to create an electronic PDF file. To use this function, proceed as follows:

- Check that the service is active, otherwise it is not possible to create a PDF file
- Go to the PDF-Network Printer section
- Select PDF
- Click on 'Add'  and give the name to the PDF printer

The parameters to be set are:

File name	Name of the PDF file that will be created		
Storage device	Allows choosing where to save the PDF file	Nand Flash (on the indicator in the \Nand_flash\Extern\ path)	
		Hard disk (USB stick connected to one of the indicator ports)	
Overwrite	If enabled, it allows the indicator to always overwrite the same PDF file with the new one using the same name; if disabled, it creates a new PDF file for each weighing. To differentiate one file from the other, date and time are added before the file name and a progressive number starting from 1 (one) is added after the file name		
Printer drivers	----------		
Delete the PDFs sent after number of days	Delete PDFs saved on nand flash or USB after a given number of days		
Email notification	Off, the service for PDF sending via email is not active		
	On, the service for PDF sending via email is active, fill in the following fields	Mail to	Recipient(s)
		Mail Cc	Recipient(s) in copy
		Mail blind cc	Recipient(s) in hidden copy
		Subject	Subject of the email
		Text	Email text
Send via FTP	Off, the service for PDF sending via FTP server is not active		
	On, the service for PDF sending via FTP server is active	Host folder	Write here the name of the folder shared on the server
		Configuring FTP client	Host: Enter the IP address of the FTP server
			User name: Provide user name to access the

				server
			Password	Provide password to access the server
			Port	Specify the communication port to the server

Press Test to check that the Skynet indicator (client) is able to connect with the FTP server; if the message 'Test OK' is displayed, press Save and Exit to confirm the configuration and exit the settings page. Otherwise, check that the settings on the Skynet indicator and the FTP server configuration are correct.

5.5 Transmission

The indicator is equipped with external serial and Ethernet communication ports. It is therefore possible to interface and communicate with various external devices such as displays, weight repeaters, PCs, PLCs and so on.
The data that can be transmitted are linked to the indicator internal programme and therefore cannot be changed.
The transmission configurations available are:

- Mpp
- Network
- Serial
- Field bus

5.5.1 Mpp

The Mpp or permanent weight memory is a legal storage system for weighing operations made with the indicator. This system allows saving metrological data on the indicator and storing them for a certain period of time strictly related to metrological laws. The minimum storage period for these weighs is 180 days, after this time the indicator will allow the user to delete obsolete Mpps to have more space on the disc. The amount of Mpp data that can be stored is directly proportional to the size of the remaining memory on the internal disc. It is advisable to delete the obsolete data to avoid unnecessary waste of memory, and to run into delays due to the processing of a huge amount of data.

The Mpp is always present on the indicator, if the system is legalised, the weighing data are saved in a table that can be consulted from the indicator. The data are stored as follows:

- At each weight acquisition an identification code is generated
- The identification code is linked to the acquisition time and date and the indicator number
- The data are saved in a storage table
- To access this table simply follow the following path: menu/info/MPP
- To search for data, enter the date and click on the magnifying glass on the right side
- If data are present, a code list is displayed
- To view the data, simply click on the code displayed
- A new page opens, which provides a summary of the stored weighing

The identification code consists of 7 digits, so the same code can only be reused after 10,000,000 weighing operations.
The MPP transmission allows sending a certified and legal data to the PC, as it is linked to the indicator by an identification code. To activate the transmission of an Mpp string to a PC, the accessory service must be activated. The activation of the Mpp service on the indicator allows using the Mpp string, its remote controls and the display of Mpp data as they are acquired.

Refer to the following settings to configure the Mpp transmission:

Weighing request	From key
	From serial
Data transmission	At the end of the operation
	From serial
Save tare	Enabled or disabled
Type of reply	Standard
	Std EN45501:2015
	Date and time + indicator number
	Indicator number
	Serial number
Indicator number	Possible to enter up to 3 digits.
Transmission	Choose one of the previously created serial or Ethernet transmissions through which to use the Mpp

Weighing request through key with data transmission at the end of the operation, wait for the stable weight signal and press the weight acquisition button to store the weight and transmit it directly to the PC.

Weighing request from serial command with data transmission at the end of the operation, load the weight on the platform, wait for the stable weight signal and acquire the data through MP<CR>command sent by PC. If the answer is yes, the indicator returns the string in the selected format.

Weighing request from key with data transmission from serial command, after loading the weight on the platform, wait for the stable weight signal and press the weight acquisition key; the indicator saves the data and the indicator can request the data through the MP<CR> command. If the answer is yes, the indicator returns the string in the requested format. It is possible to request the data several times by typing the same command. To allow the indicator to perform a new weighing operation, the MC<CR> command must be sent.

Weighing request and data transmission through serial command, after loading the weight on the weighing platform it is possible to send the remote command MP<CR>, when the stable weight signal is reached the indicator acquires the weight; to transmit the weight it is necessary to send again the command MP<CR>after which the indicator will return the string in the selected format. To allow the indicator to perform a new weighing operation, the MC<CR> command must be sent.

5.5.2 Network

This function allows creating an external transmission using the network card on the Skynet indicator. The indicator IP address, subnet mask, default gateway and DNS settings can be found in the Start menu, refer to the relevant manual to configure them.
To create a network transmission, proceed as follows:

- Follow the path Menu/Tools/Configuration/transmission/network to enter the creation page
- Click on 'Add' to create a new transmission instance
- Enter the name for the following instance and confirm

To configure the transmission correctly, check the following data:

Scale	Select one of the existing scales: A, B, C, D, S, Selected	
Port	6001 is the standard port used to transmit the data string externally, it is possible to open another port if necessary	
Transmission range (ms)	250 default, indicates the pause between the transmission of one data and the next in cyclic mode; in this way the string is transmitted 4 times per second. It is possible to reduce the interval up to 100 ms and then transmit data up to 10 times per second (10Hz)	
Type of string	The strings present in the Skynet indicator are as follows, to check their structure refer to the transmission manual	
	Extended	The following protocols are available: Cyclic, On Demand, ACK NAK, Remote Commands
	CB	The following protocols are available: Cyclic, On demand, ACK NAK
	Btek	The following protocols are available: Cyclic, On request
	Modbus	The ModbusTCP protocol is available
	Cardinal	The following protocols are available: Cyclic, On request
	Cardinal 748P	The following protocols are available: Cyclic, On demand, ACK NAK
	SASCO1	The following protocols are available: On request, Remote commands
	telecontr-extended	The following protocols are available: Cyclic, On Demand, ACK NAK, Remote Commands
Protocol	Cyclic, i.e. the string is transmitted continuously immediately after the indicator is correctly switched on, the cyclic string uses the transmission interval to time the data output	
	On request, i.e. the selected string format is transmitted: either when the weighing key is pressed; or upon activation of an input related to weighing (check the list of available inputs)	
	On request with ACK NAK, i.e. the string is sent in the chosen format only upon the user request. The request can be made: either by pressing the weighing key;	

	or by activating a weighing input; the indicator then behaves as follows: sends the data 3 times consecutively, if the indicator receives the ACK character (06H) it waits for a new request; If it receives the NAK character (15H) it retransmits the string because the previous transmission failed; After receiving the NAK character 3 times consecutively, the indicator inserts the message "NO ACK" (transmission error) in the MF_error_LOG file
	Remote commands, i.e. the dialogue between the devices takes place only through specific commands transmitted by the external device (available only in extended string format); to check which remote commands are available, refer to the transmission manual
Decimal separator	Comma
	Point
Checksum	Enabled/disabled

5.5.3 Serial

This function allows creating an external transmission using the standard Rs-232, Rs-422, protocols.
To create a serial transmission, proceed as follows:

- Follow the path Menu/Tools/Configuration/transmission/serial to enter the creation page
- Click on 'Add' to create a new transmission instance
- Enter the name for the following instance and confirm to create it

To configure the transmission correctly, check the following parameters:

Scale	Allows selecting a scale from those selected A, B, C, D, S or selected scale	
Port	Allows selecting the COM port to use (COM4, COM6, COMx depending on the optional cards or adapters fitted on the indicator)	
Transmission range (ms)	250 default, indicates the pause between the transmission of one data and the next; in this way the string is transmitted 4 times per second. It is possible to reduce the interval up to 100 ms and then transmit data up to 10 times per second (10Hz)	
Type of string	The strings present in the Skynet indicator are as follows, to check their structure refer to the transmission manual	
	Extended	The following protocols are available: Cyclic, On Demand, ACK NAK, Remote Commands
	CB	The following protocols are available: Cyclic, On demand, ACK NAK
	Btek	The following protocols are available: Cyclic, On request
	Modbus	Modbus-RTU protocol is available
	Cardinal	The following protocols are available: Cyclic, On request
	Cardinal 748P	The following protocols are available: Cyclic, On demand, ACK

		NAK
	SASCO1	The following protocols are available: On request, Remote commands
	telecontr-extended	The following protocols are available: Cyclic, On Demand, ACK NAK, Remote Commands
Protocol	Cyclic, i.e. the string is transmitted continuously immediately after the indicator is correctly switched on, the cyclic string uses the transmission interval to time the data output	
	On request, i.e. the selected string format is transmitted: either when the weighing key is pressed; or upon activation of an input related to weighing (check the list of available inputs)	
	On request with ACK NAK, i.e. the string is sent in the chosen format only upon the user request. The request can be made: either by pressing the weighing key; or by activating a weighing input; the indicator then behaves as follows: sends the data 3 times consecutively, if the indicator receives the ACK character (06H) it waits for a new request; if it receives the NAK character (15H) it retransmits the string because the previous transmission failed; after receiving the NAK character 3 times consecutively, the indicator inserts the message "NO ACK" (transmission error) in the MF_error_LOG file	
	Remote commands, i.e. the dialogue between the devices takes place only through specific commands transmitted by the external device (available only in extended string format); to check which remote commands are available, refer to the transmission manual	
Decimal separator	Comma	
	point	
Checksum	Enabled/disabled	

5.5.4 Indicator parameters

In this page it is possible to configure:

Indicator number	Indicate the terminal number if using remote commands followed by the identification number of the terminal. Works with "Extended" string "With remote commands" or "Request".
Sasco progressive number	Specific parameter used only by the Sasco string

5.5.5 Field bus

5.5.5.1 Profibus

It is possible to connect to the indicator a Profibus gateway capable of interfacing with an external PLC system. To check the characteristics of the gateway, visit the manufacturer's website.
The field bus transmission configuration parameters are as follows:

Scale	Allows selecting a scale from those selected A, B, C, D, S or selected scale	
Transmission range (ms)	250 default, indicates the pause between the transmission of one data and the next; in this way the string is transmitted 4 times per second. It is possible to reduce the interval up to 10 ms and then transmit data up to 100 times per second (100 Hz)	
String	The strings present in the Skynet indicator are as follows, to check their structure refer to the transmission manual	
	Extended	The following protocols are available: Cyclic, On Demand, ACK NAK, Remote Commands
	CB	The following protocols are available: Cyclic, On demand, ACK NAK
	Btek	The following protocols are available: Cyclic, On request
	Cardinal	The following protocols are available: Cyclic, On request
	Cardinal 748P	The following protocols are available: Cyclic, On demand, ACK NAK
	SASCO1	The following protocols are available: On request, Remote commands
	Extended-traffic light	The following protocols are available: Cyclic, On Demand, ACK NAK, Remote Commands
Protocol	Cyclic, i.e. the string is transmitted continuously immediately after the indicator is correctly switched on, the cyclic string uses the transmission interval to time the data output	
	On request, i.e. the selected string format is transmitted: either when the weighing key is pressed; or upon activation of an input related to weighing (check the list of available inputs)	
	Remote commands, i.e. the dialogue between the devices takes place only through specific commands transmitted by the external device (available only in extended string format); to check which remote commands are available, refer to the transmission manual	
Decimal separator	Comma	
	point	
Checksum mode	Enabled/disabled	
Device Name	Select the expansion card on which you want to enable the field bus transmission; the name "OPB" is displayed, followed by the number of the expansion slot on which it is installed	
Waiting for stable	Enabled/disabled (for SASCO1 string only)	

weight	
Stable weight time out (ms)	Stable weight waiting time for data string sending (valid for SASCO1 string only)

Once the transmission on the field bus has been configured it is possible, by clicking on the TEST button, to enter the section of writing and reading tests. This section is also dedicated to changing the ProfiBus card address; with the + or - buttons it is possible to select the desired address, then the Save button allows saving the desired address.

5.5.5.2 Modbus-RTU

The terminal can be connected in slave mode with Modbus protocol, through a serial port (Modbus-RTU) or via TCP (Modbus-TCP).
In addition to the standard configuration parameters of the transmission interface, some specific parameters for the Modbus protocol are available:

Scale	Allows selecting a scale from those selected A, B, C, D, S or selected scale
Port	Allows you to select the Port (e.g. 6001) or COM to be used (COM4, COM6, COMx according to the optional boards or adapters mounted on the terminal)
String	Modbus
Protocol	Modbus-RTU
Modbus Slave ID	from 1 to 255, sets the ID with which the slave identifies himself in the network
Modbus Enable liltle endian	Allows you to enable byte order as Little Endian
Modbus Swap float bytes order	In the case of float or long variables, it allows you to change the order of the 2 modbus registers.

These last two parameters (Enable liltle endian and Swap float bytes order) do not alter the reading of the variables, but adapt only the convention of coding and interpretation of the values.

• Int variables can be programmed via configuration parameters such as big / little endian
• Long variables can be programmed via configuration parameters such as big / little endian and with exchanged registers
• Float variables can be programmed via configuration parameters such as big / little endian and with exchanged registers
• Boolean variables are essentially Int variables that can only take the value 0 or 1

Input Register (Op.code = 04) (Read-only)

Variable	Type	Register	Notes
Scale			
Gross Weight	Float	1-2	
Net Weight	Float	3-4	
Tare	Float	5-6	
Max capacity	Float	7-8	
Weight in divisions	Float	9-10	
Gross weight (high resolution)	Float	11-12	*Only if not legal terminal*
Net weight (high resolution)	Float	13-14	*Only if not legal terminal*
Status	Int	15	
Stable Weight	Boolean	16	
Zero	Boolean	17	
Minimum Weight	Boolean	18	
Underload	Boolean	19	
Overload	Boolean	20	
Comandi MPP			
MPP Status	Int	30	*Only if MPP is licensed enabled*
MPP Code	Long	31-32	*Only if MPP is licensed enabled*
MPP Gross Weight	Float	33-34	*Only if MPP is licensed enabled*
MPP Net Weight	Float	35-36	*Only if MPP is licensed enabled*
MPP Tare	Float	37-38	*Only if MPP is licensed enabled*
MPP Tare P1	Float	39-40	*Only if MPP is licensed enabled*
MPP Tare P2	Float	41-42	*Only if MPP is licensed enabled*

Holding Register (Op.code = 03 - 06 - 16) (Read-write)

Variable	Type	Register	Note
MPP Tare	Float	1-2	*Only if enabled*
MPP Tare P1	Float	3-4	*Only if enabled*
MPP Tare P2	Float	5-6	*Only if enabled*
Selected scale	Int	10	

Coil (Op.code = 01 - 05 - 15) (Read-write)

Variable	Type	Register	Note
Reset Scale	Command	1	
Self-weighed tare	Command	2	
Clear Tare	Command	3	
Run weighing MPP	Command	20	*Only if MPP is licensed enabled*
Input/Output			
Output 01	Read write	1001	

Output 02	Read write	1002	
Optional Outputs	Read write	1101...11xx	*Slot1*
Optional Outputs	Read write	1201...12xx	*Slot2*

Discrete input (Op.code = 02) (Read-only)			
Variable	**Type**	**Register**	**Note**
Input/Output			
Input 01	Read-only	1001	
Input 02	Read-only	1002	
Input opzional	Read-only	1101...11xx	*Slot1*
Input opzional	Read-only	1201...12xx	*Slot2*

The addresses expressed in the table are all in Base 1.

5.5.6 Printed data string

Through the printed data string it is possible to send to a PC a string containing different data such as weight, indicator IP address, operation type and so on. The composition of the printed data string varies depending on the programme installed on the indicator. To know the structure of every single string, refer to the specific manuals for the installed application.
This type of string can be sent via:

- Network
- Serial

5.5.6.1 Transmission of printed data string via network

The parameters available for network transmission are as follows:

Port	6001 is the standard port used to transmit the printed data string externally, it is possible to open another port if necessary	
Protocol	On request	The weighing data are first transmitted and then printed out. With ACK NAK protocol, if the transmission fails (the ACK command is not sent) the line "ERROR PRINTED DATA TRANSMISSION ERROR" is added at the bottom of the printout With this mode the strings on which this situation occurs are permanently lost.
	Spool	The weighing data are first printed out and then, if the printout ends correctly, they are transmitted with ACK NAK protocol. If the transmission fails, the string that was to be transmitted is stored in a special archive called TxWeighing; in this archive the transmissions waiting to be transmitted are saved. The transmission of the strings in the queue is attempted every time the transmission of the weighing operation in progress must be carried out: if there are already strings in the queue, their transmission is carried out first, then when the queue

		has been emptied the string relevant to the current operation is transmitted (the transmission takes place in chronological order, from the oldest string to the most recent one). Each string is deleted from the queue only after it has been correctly transmitted. With this mode the weighing operation in progress is slowed down proportionally to the number of strings present in the TxWeighing archive, in fact the weighing in progress is completed only at the end of its transmission.
	Archive	The weighing data are first printed out and then, if the printout ends correctly, they are stored in a special archive called TxWeighing. In order to retrieve all stored weighing operations from the indicator, the PC must send the character ENQ (05 hexadecimal or CTRL + E). If the indicator accepts the transmission request received from the PC by sending the character ENQ, it extracts from the TxWeighing archive the data relating to the first weighing contained in the archive (the transmission takes place in chronological order, from the oldest string to the most recent one). Each string is deleted from the archive only after it has been correctly transmitted. After the correct transmission of the last string contained in the archive, the indicator sends the character EOT (04 hexadecimal) to the PC to inform it that the archive is now empty. With this mode the PC must send its enquiry when the indicator is not performing weighing operations. On the contrary; the weighing operation in progress may slow down.
Decimal Separator	Comma	
	Point	
Checksum	Enabled/disabled	
Enabled	Enabled/disabled	

5.5.6.2 Transmission of printed data string via serial transmission

The parameters available for serial transmission are as follows:

Port	The COM ports available are those indicated in the drop-down menu, select one of the COM ports not used	
Protocol	On request	The weighing data are first transmitted and then printed out. With ACK NAK protocol, if the transmission fails (the ACK command is not sent) the line "ERROR PRINTED DATA TRANSMISSION ERROR" is added at the bottom of the printout With this mode the strings on which this situation occurs are permanently lost.
	Spool	The weighing data are first printed out and then, if the printout ends correctly, they are transmitted with ACK NAK protocol. If the transmission fails, the string that was to be transmitted is stored in a special archive called TxWeighing; in this archive the transmissions waiting to be transmitted are saved. The transmission of the strings in the queue is attempted every time the transmission of the weighing operation in progress must be carried out: if there are already strings in the queue, their transmission is carried out first, then when the queue has been emptied the string relevant to the current operation is transmitted (the transmission takes place in chronological order, from the oldest string to the most recent one). Each string is deleted from the queue only after it has been correctly

		transmitted. With this mode the weighing operation in progress is slowed down proportionally to the number of strings present in the TxWeighing archive, in fact the weighing in progress is completed only at the end of its transmission.
	Archive	The weighing data are first printed out and then, if the printout ends correctly, they are stored in a special archive called TxWeighing. In order to retrieve all stored weighing operations from the indicator, the PC must send the character ENQ (05 hexadecimal or CTRL + E). If the indicator accepts the transmission request received from the PC by sending the character ENQ, it extracts from the TxWeighing archive the data relating to the first weighing contained in the archive (the transmission takes place in chronological order, from the oldest string to the most recent one). Each string is deleted from the archive only after it has been correctly transmitted. After the correct transmission of the last string contained in the archive, the indicator sends the character EOT (04 hexadecimal) to the PC to inform it that the archive is now empty. With this mode the PC must send its enquiry when the indicator is not performing weighing operations. On the contrary; the weighing operation in progress may slow down.
Decimal Separator	Comma	
	Point	
Checksum	Enabled/disabled	
Enabled	Enabled/disabled	

5.5.6.3 General

From this page it is possible to choose whether or not to transmit the first weighing, this parameter is enabled for example in double weighing operation.

Transmit first weighing operation	Yes/No

5.5.6.4 Delete data

This function allows deleting the data contained in the TxWeighing archive, stored using the Archive or spool protocols, in case they are no longer needed.
To delete them, simply click on the relevant icon, press yes to confirm and delete or press no to go back.

5.5.7 Analogue output

Up to 2 optional analogue cards can be fitted on the indicator. Depending on the hardware configuration of the card it is possible to use it to manage the voltage output from 0V to 10V or the current output from 4mA to 20mA.

To enable the analogue output go to the configuration section and select  'Analogue Output'. Once inside the page, if the card is installed correctly, it is possible to see the instance named with a number corresponding to the expansion slot on which it is installed.

To configure it, double-click on the small arrow on the right side.

Enable	Enable or disable the operation of the optional card
Scale	Select the scale on which you want to use the optional card: Selected, A, B, C, D, S
Weight	Indicate with which type of weight the analogue output must vary: Net weight, Gross weight
Type of output	Depending on the position of the jumper, select the correct output. Available: Voltage, Current

Save to confirm the configuration and proceed to use.

5.6 Activating the optional services

The Skynet indicator contains optional services that can be activated through an activation code. The services available are:

MPP	Permanent weight memory, used in legal weighing. When the system is approved and legal weighing is enabled, the system automatically generates the MPP code and enters the data into the MPP archive. Enabling the service therefore allows enabling the display of data and remote controls. It is activated if the customer needs to send the weighing data to a PC.
PDF printer	The PDF printer is used by the customer to generate a weighing in electronic format. If activated and selected as (primary or secondary) system printer, it generates a PDF file containing the weighing data at the time of weighing. Therefore it is possible to use the spreadsheet in different ways. Available: File saving on device internal or external memory, file sending via email or FTP.
Network printer	The network printer is used by the customer to take advantage of one or more printers already present in the company network. This function allows printing, at the time of weighing, directly from a network printer. To check the compatibility of your printer, refer to paragraph 4.1 on page 28.
Axle weighing	Available in the Double Weighing software. The axle weighing is activated when the customer needs to measure the weight of each vehicle axle. To configure it, refer to paragraph 2.3.1 on page 22

5.7 Themes

From the themes section it is possible to choose a background colour for the indicator. Select your preferred theme and save to apply it.

5.8 Shortcut keys

The tools menu allows customising the shortcut keys. Click on the relevant icon to access the customisation page. When the application is installed, some default shortcut keys are already present. They refer to the specific functions of the software, so they may vary. The 4 shortcut keys in the first line will be positioned in the shortcut line above the metrology weighing keys. Subsequently added shortcut keys will be placed on the 'Shortcut keys' page visible from the weighing screen.

To edit, add or delete the shortcut keys, refer to the following definitions:

Save	Used to save the current configuration and exit
Delete	Select the shortcut key to be deleted then click on the Delete key to remove it
Rename	Select the shortcut key to be renamed, then click on the Rename key: a window opens, in which it is possible to type the desired name (the keyboard appears only when you touch the part of the screen on which to write), click Save to confirm the change. (the space available for the text is max 14 characters, the following will be omitted for space issues)
New	It allows accessing the pages containing all the available shortcut keys, selecting the desired key to read a short description of its operation, selecting it again to add it to the shortcut keys.
Move first	This function allows moving the selected icon to the first position. To use it, select the shortcut key to be moved, then press 'Move first' to move it to the first position.
Move after	This function allows moving the selected icon to the last position. To use it, select the shortcut key to be moved, then press 'Move after' to move it to the last position.
Default text	Use this function to restore the initial condition of the icon text. To use it, select the icon and press ‘Default text’.

5.9 Switching off

It allows temporarily deactivation of the screen, which turns black, and the indicator seems apparently off (the blue LED on the on/off key remains on). To reactivate the screen, simply touch it anywhere.

5.10 Access levels

Refer to paragraph 5.2.5 on page 58.

5.11 Error management

In this menu it is possible to manage the errors displayed concerning Scale and Printer.

Depending on the category chosen, the error will be displayed in different ways:

Category	Effect
1	The error is displayed inside the status bar at the top of the screen
2	The error is displayed in a pop-up window in the centre of the screen. Wait a few seconds for closing or touch the screen to anticipate it
3	The error is displayed in a pop-up window in the centre of the screen. It is necessary to touch the screen to close the window, otherwise it remains open

If an optional Input/Output card has been installed, it is also possible to activate an external signal (Output) by selecting an available Output.

5.12 Sharing data

The Skynet indicator is able to share its archives with external sources. It is possible to share data with another indicator on which the same application is installed, or on a Windows PC with SQL software installed. It is also possible to use an external device, USB stick or SD card, as indicator database.

5.12.1 Database

In the Others section of the Application/Others menu it is possible to configure the database management. Click the 'Database'  icon to access the configuration:

Connection	Local
	Remote
	PC

Local:

Database path	\Nand_flash\Public\Managed Framework\DBStore	The database is saved directly on the indicator in the indicated path (the path cannot be changed)
	\Storage Card	The database is saved on the SD card installed on the back of the device
	\Hard Disk	The database is saved on the USB stick installed on the back of the device, the order is discriminated by the indicator when inserting the USB sticks
	\Hard Disk 2	
	\Hard Disk 3	

Remote:

Device IP address	Enter the IP address of the remote indicator from which you want to use the database

PC:

Server name	Enter the name of the SQL instance on PC or the IP address of the PC (example: MROSSI-SQLEXPRESS or 192.168.10.102)
Connect to the database	Enter the name of the database previously created on SQL server (example: Skynet-DB)
Login account name	Enter the user name used to access the SQL server database engine (example: sa)
Login account password	Enter the user name password to access the SQL server database engine

To check the correct connection with the SQL server, try to access the archives on the Skynet indicator. If this is not possible, check the network settings of the indicator (IP address, subnet mask) and the configuration of your SQL server instance.

5.13 Adding an external printer

To connect a printer to the indicator, simply follow this procedure:

1. Navigate to the 'Printers / Readers / IOs'  menu, to reach it follow the path Menu / Tools / Configuration / System;
2. Select the Printers tag;
3. Select the Printers item so that its background turns white
4. Select the 'Add'  icon, a form will open to rename the printer, then write the desired name and confirm to proceed;
5. Now the new instance created is displayed, select model and connection COM, save and exit;
6. Select  'Serial Ports' and once in the menu move to the same COM used for the printer
7. Once inside the COM configuration menu set the parameters according to the communication specifications of the printer. The Skynet terminal requires the use of hardware handshakes only if COM4/COM8 (optional) is selected and a suitable cable; at the end save and exit the COM menu
8. Exit the System menu by pressing Close, you are now in the configuration menu, press 'Application' and then 'Others'
9. select  'Printer';
10. Configuration of the parameters 
11. In this page set the created printer as the primary (or secondary if you have another printer) and then save and exit;
12. Before using the printer perform a test, select Info from the Tools menu and then Test;
13. Select Print;
14. A page opens that shows the possibility to set the test you want to perform

Printers	Select the printer to be tested
Filter	Select the layout format type, to make a simple test select the *.bpl format
Layout	Carry out a complete test, select adrinput.bpl (if double weigh version) or weighing.bpl (if single weigh) and press the "Check printer status" key

At the end of the print tests, it is possible to exit and return to normal operation.
If the test does not work, check the connection cable between the indicator and the printer, usually a label is present to avoid reversing the connectors; also check the printer settings if necessary, to access the configuration menu refer to the specific printer manual.
If the problem persists, check the printer configuration starting from step 5 to step 13.

5.14 Adding a reader

To connect a Skynet indicator reader, simply follow this procedure:

1. Navigate to the 'Printers / Readers / IOs'  menu, to reach it follow the path Menu / Tools / Configuration / System;
2. Select Readers tag;
3. Select the Readers item so that its background turns white;
4. Select the  icon, a form will open to rename the reader, then write the desired name and confirm to proceed;
5. Now the new instance created is displayed, select the model and the connection COM, save and exit;
6. Select  'Serial Ports' and once in the menu move to the same COM used for the reader;
7. Once inside the COM configuration menu, set the parameters according to the reader communication specifications. The Skynet indicator does not foresee the use of hardware Handshake, at the end save and exit the COM menu;
8. Exit the System menu by pressing Close, you are now in the Configuration menu, then press  'Cards' and select the type of card that corresponds to the one to be used, save and exit;
9. Before using the reader perform a test, select Info from the Tools menu and then Test;
10. Select card reader
11. A page opens where the code read by the reader is displayed, then read the card through the reader and check that the code is displayed;
12. In order to associate a card code to an operator code, it is necessary to code every single card and associate it manually to the desired operator code. The operator code must be contained in an indicator operation archive. In addition, if enabled, it is also possible to generate a simple weighing using the badge even if not coded. Then, in the 'Archives' page, 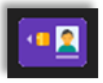 select 'Card Encoding';
13. In the menu at the bottom of the screen, select New to add a new encoding;
14. Enter the operator code, i.e. the code you wish to recall using the card and press Enter;
15. Now select the blank section next to Card Code item and, using the reader, read the card, press Enter to confirm;
16. As you can see from the screen, the card code is captured and then associated to the desired code, save and exit or save and proceed with the addition of a new code;

From the main page it is now possible, using the reader, to quickly and easily recall the data stored in the operating archives.

If the badge is not valid or associated with any code, the following image  is displayed at the top of the screen. In case no badge is read, check the correct configuration of the card type in the Configuration/Cards section.

5.15 Adding a network or PDF printer

To add a network or PDF printer, follow the procedure below:

1. Activate the service from the ‘Activating utilities’  page, to activate it refer to paragraph 5.6 on page 77;
2. Once the service is activated, enter the configuration menu and select  'PDF-Network printer';
3. Depending on the activated option, select network or PDF printer;
4. Select  'Add' and name the new instance, confirm;
5. Set the parameters according to the specifications on page 69, 71 depending on the type of printer chosen and then save;
6. Now select the printer, go to the Configuration menu and click  'Application';
7. Click Others and then  'Printer';
8. To select the created printer, click next to the Main Printer Alias item, a window containing the name of the previously added printer is displayed;
9. To add it, click directly on the name;
10. save and exit to confirm.

To test a network or PDF, perform a weigh, so go back to the weight view page, load a weight on the platform and click the First Weighing button. Then wait for the correct end of the procedure and check that the sheet is printed by the network printer or the PDF file is generated by the indicator. If printing fails, check the printer settings carefully. If there are serious errors, the system will record the error in the LOG of the managed framework, making it possible to identify the error location.

5.16 Testing a serial transmission

The indicator is able to send a data string to external devices. The available data strings are listed in paragraph 5 on page 30.
Once the transmission has been configured, whether serial or network, it can be tested via PC. Then connect the free end of the cable to the PC, using an adapter if necessary, and open a software capable of handling incoming data traffic (example: Hyper Terminal). In case of serial connection, set the reception data in the same way as they are set on the indicator (baud rate, stop bit). In case of Ethernet connection, set the IP address of the indicator and the communication port entered in the indicator configuration.
In case of cyclically transmitted string, when the connection to the indicator is activated, the data will start to be displayed on the monitor. If the string is transmitted via remote commands, ACK NAK or on request, send for example the string transmission start command (<SX>CR) to start the dialogue between the devices; to end the dialogue send the string end command (<EX>CR).

6 OPTIONS

The DD1010 SKYNET weighing indicator provides for the installation of optional cards, peripherals and accessory software.

Some options also include the firmware update. Contact the After-Sales Service or the Sales Service Network.

The options currently provided (at the date of writing of this manual) are:

- Serial expansion card RS232 - RS422
- 0-10V/4-20mA analogue output card, analogue input and pulse counter (sensor interface)
- Sound card
- Printers
- WI-FI modules (external)
- HDMI optional card
- Wall-mounting brackets
- Second scale module
- Additional displays
- 8 input/12 output card

6.1 Installing Optional Cards

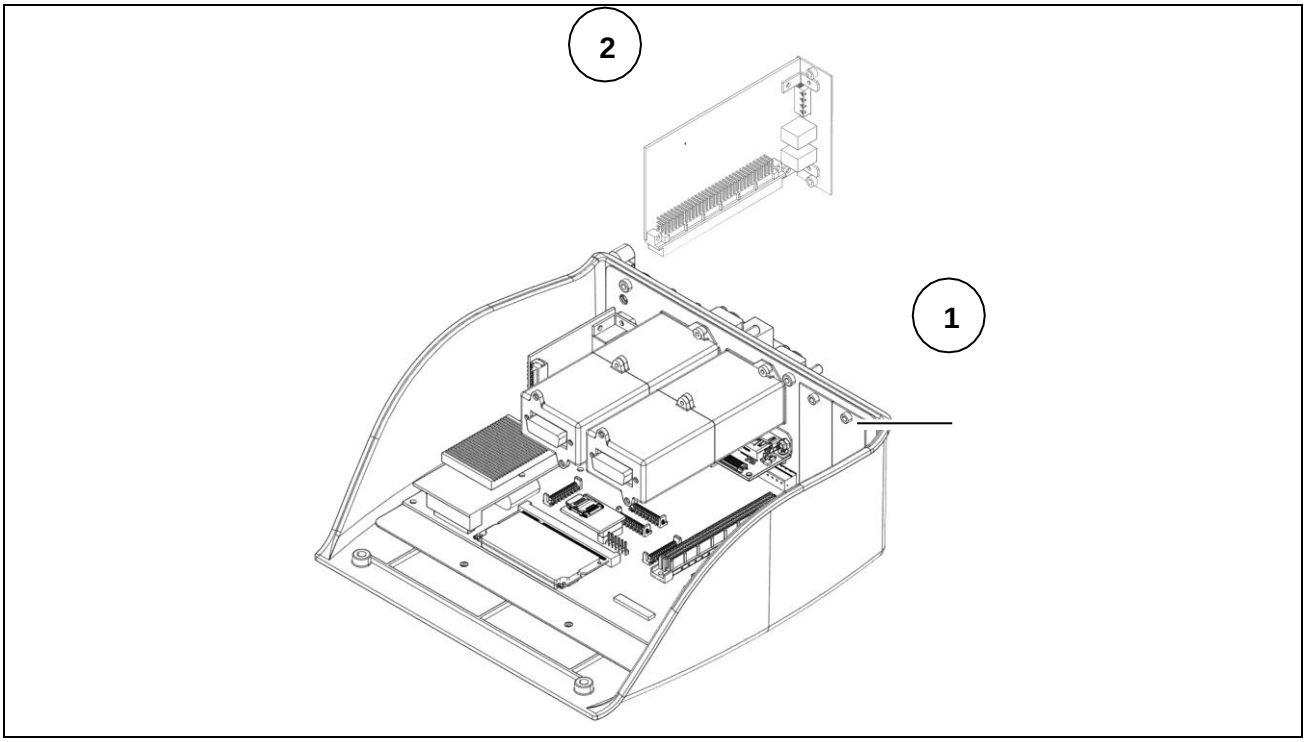

Figure 6.1-1 - Installing Optional Card

1. Remove the indicator cover.
2. Remove the closing plate (ref. 1), if any.
3. Install the optional card (ref. 2) in the slot provided.
4. Make the necessary connections.

WARNING
The figure is for illustrative purposes only, refer to the cover removal procedures in chapter 10.

6.2 Optional Card Overview

6.2.1 Sound card

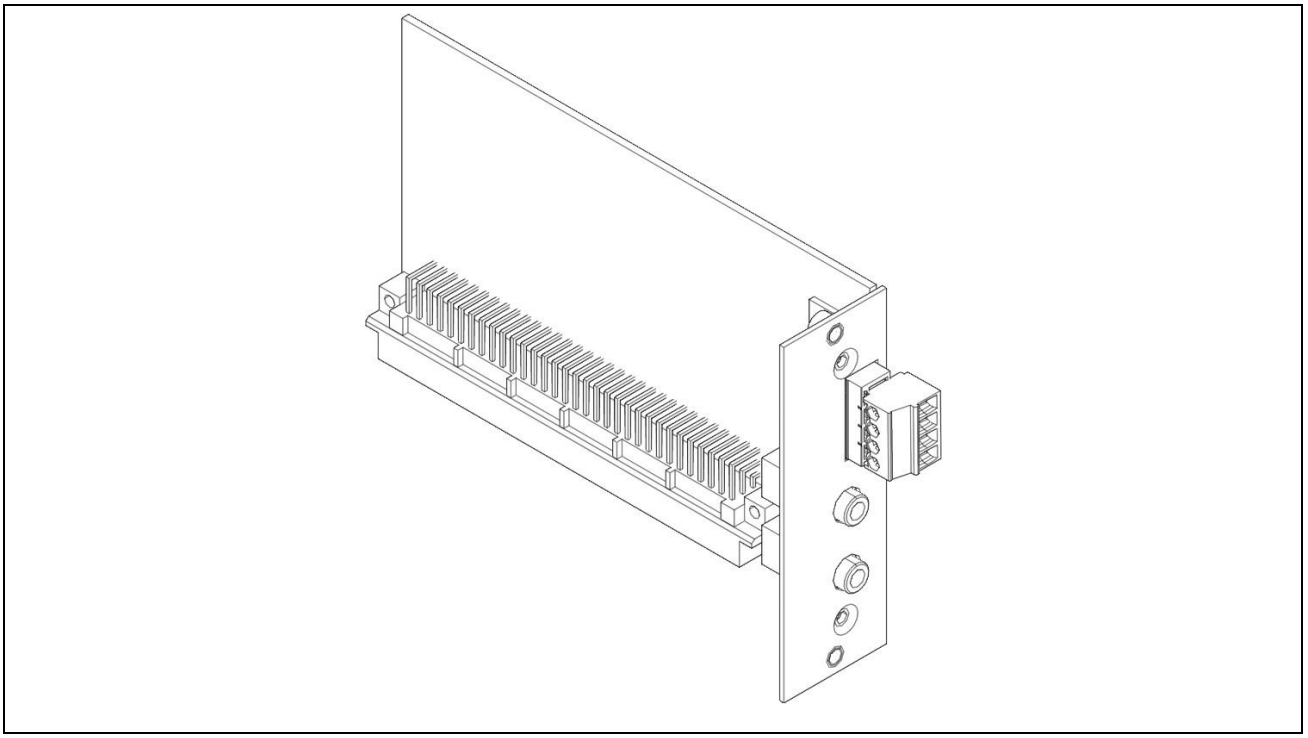

Figure 6.2-1 - Sound card

The sound card consists of:

- Lower microphone input jack
- Upper headphone output jack,
- Amplified loudspeaker output top clamp

Clamp numbering from below (pin1 at the bottom):

- pin1: out + LH loudspeaker
- pin2: out - LH loudspeaker
- pin3: out + RH loudspeaker
- pin4: out - RH loudspeaker

6.2.2 8 in/12 out card

Function description

The 8 input/12 output expansion card allows the weighing indicator on which it is installed to manage 8 dry contact input signals (coming for example from a relay output) and to provide 12 digital dry contact output signals.
The input signals can be connected in two different ways (see fig. 6.2.2-1: proximity sensor connection example):

1. Using the opto-insulated +12V inside the board provided on the 25-pin output connector
2. Providing a +12V or +24V voltage external to the card and suitably filtered

In order to use solution 1) it is necessary to close the jumper J4; in case of solution 2) the jumper J4 must remain open (see fig. 6.2.2-2).

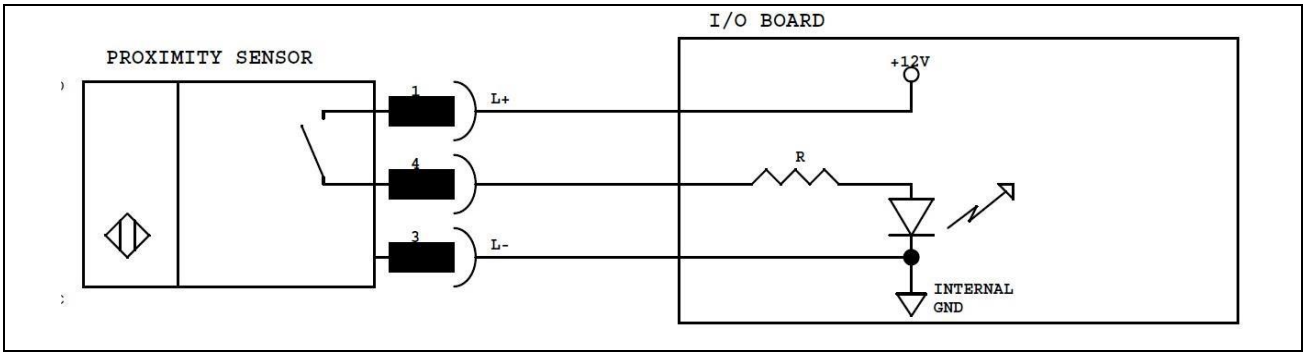

Figure 6.2-2 - Possible proximity sensor connections - Solution 1

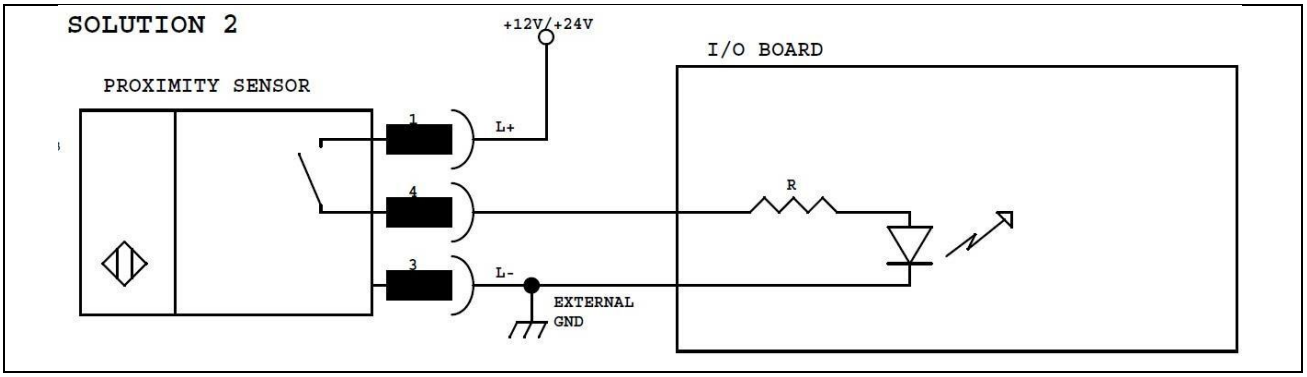

Figure 6.2-3 - Possible proximity sensor connections - Solution 2

As far as the digital output signals are concerned, 3 independent output units are available, each of which refers to a different common pin.

All output signals are of dry contact type and common pins can be connected together to use a single voltage reference.

The card also has a hardware watchdog management that allows guaranteeing the almost instantaneous reset (about 1 second) of all digital outputs in case of undesired block or stop of the weighing indicator.
To enable the hardware watchdog function it is necessary to close the jumper J19 on the card, to keep this function disabled, leave the jumper J19 open.

Technical characteristics

Inputs	
Maximum voltage (DC)	+24 V
Maximum current (DC)	40 mA
Notes	Inputs can be controlled by dry contact outputs (e.g. relays) or NPN NO transistor outputs
Outputs	
Maximum switchable voltage (AC/DC)	24V
Maximum switchable current (AC/DC)	190 mA
Maximum power	800 mW
Notes	Dry contact output (solid state contact - optomos)

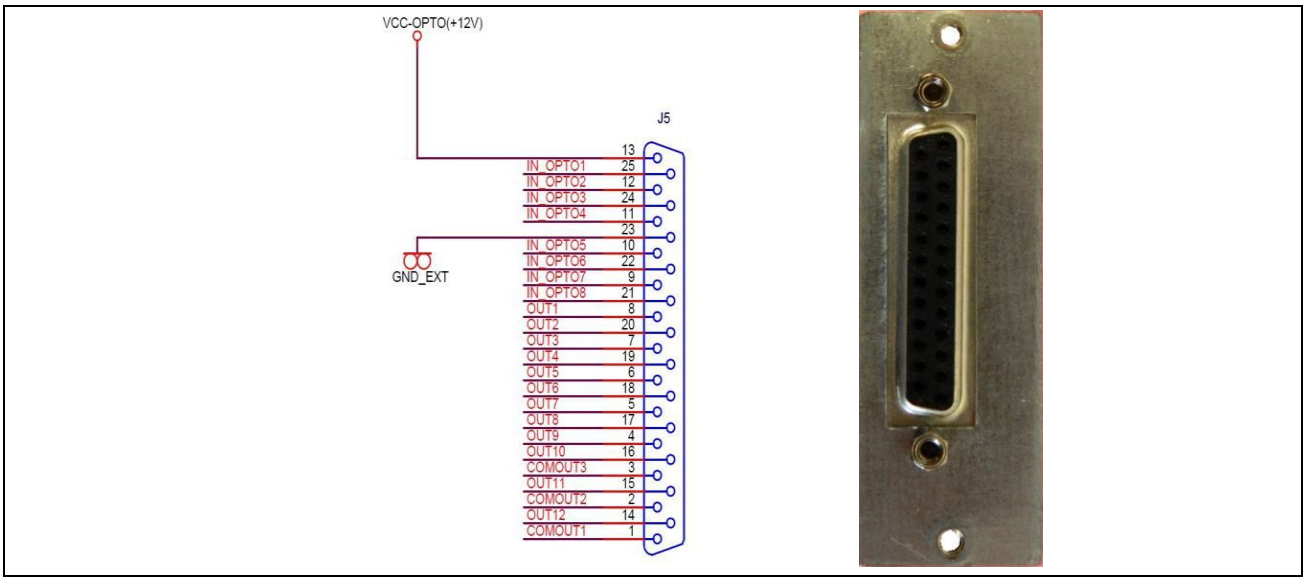

Figure 6.2-3 - 25-pin output connector

Overall dimensions

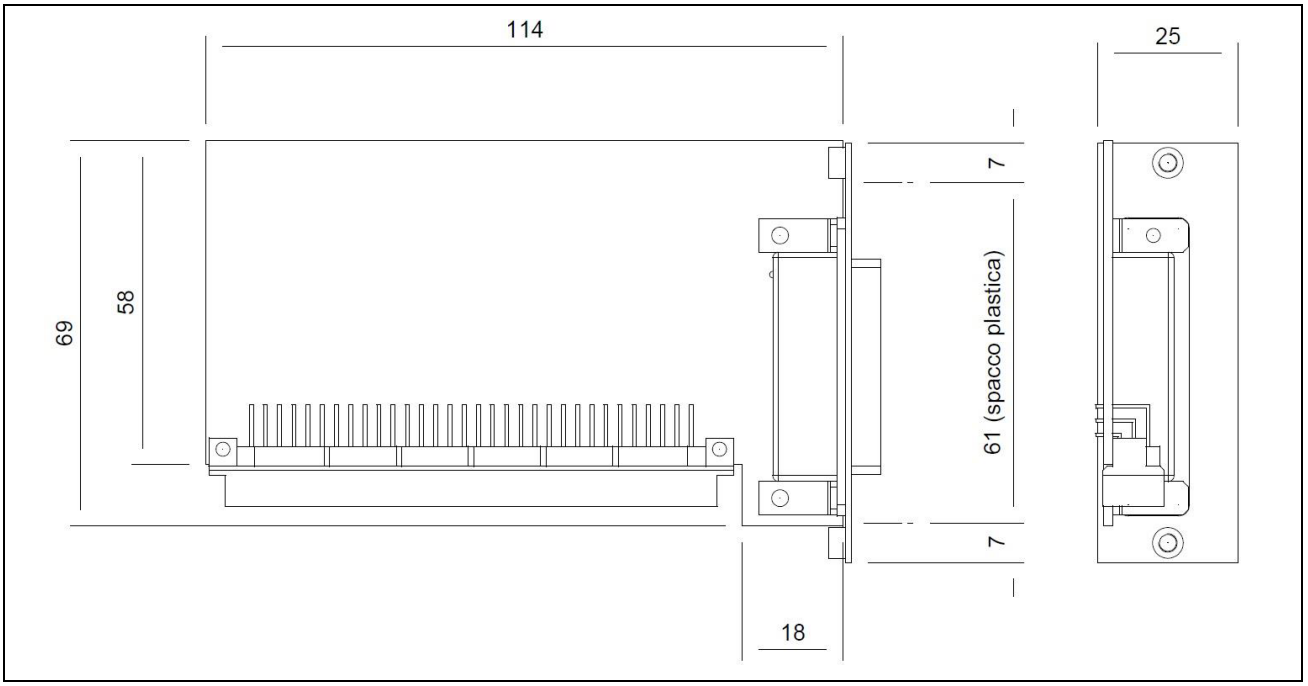

Figure 6.2-4 - Overall dimensions table 1 (values in mm)

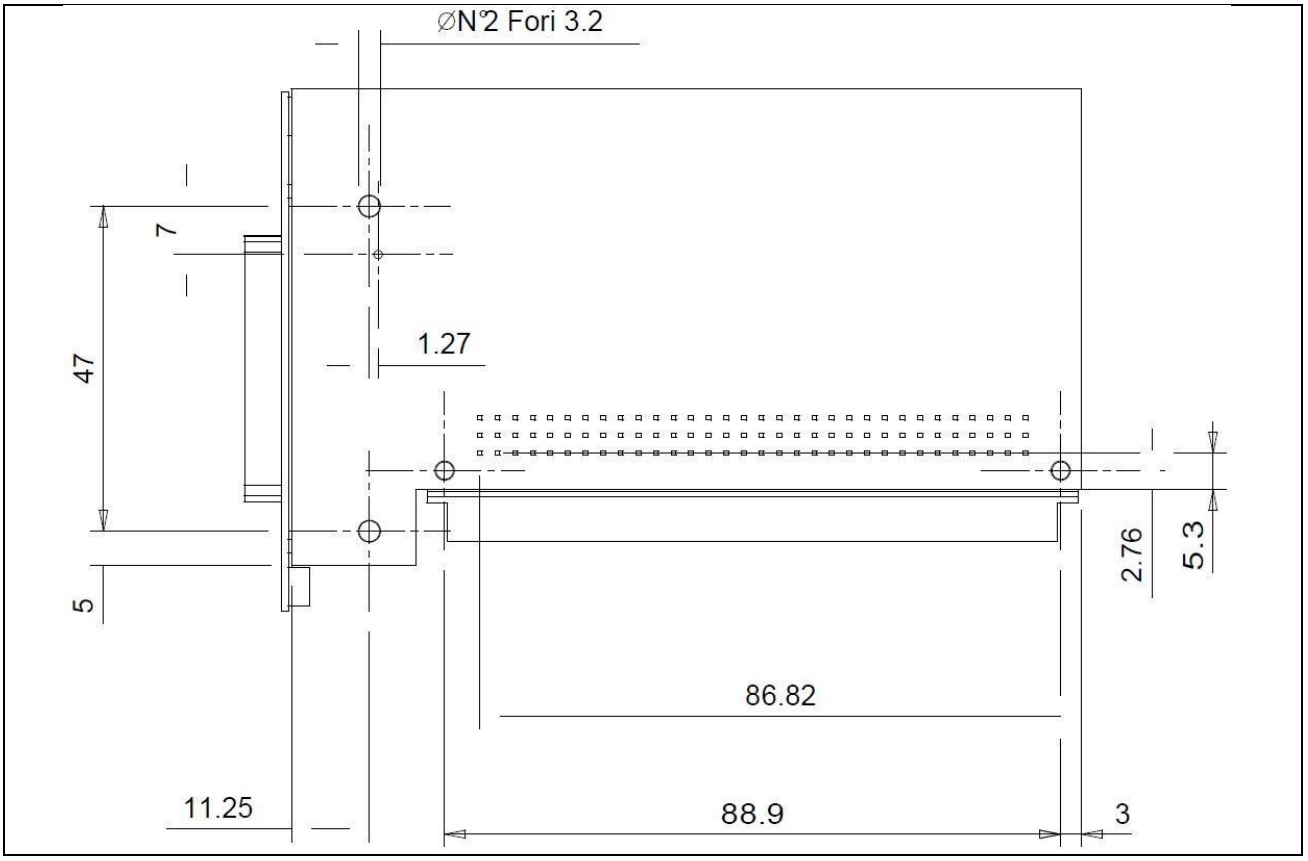

Figure 6.2-5 - Overall dimensions table 2 (values in mm)

6.2.3 Pulse input analogue output card

To obtain the current output, place the jumper J14 on pins 2-3; the relevant output pins are 11 (output current), 9 (input current). The manageable current must be ≤ 190 mA (AC/DC).
To obtain the voltage output, place the jumper on pins 1-2; the relevant output pins are 12 (output voltage), 8 (GND). The switchable voltage must be ≤ 24 V (AC/DC).

If an analogue output expansion card is installed inside the indicator, the connections must follow these instructions:

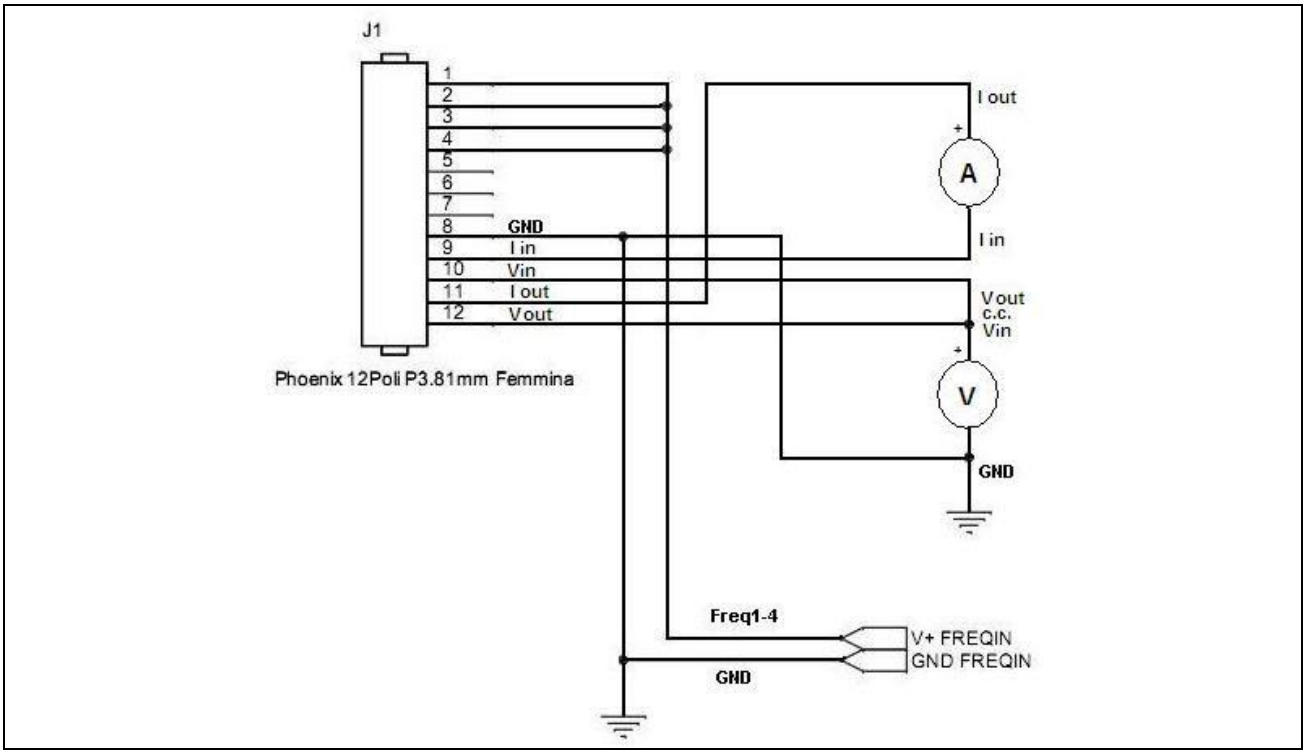

Figure 6.2-6 - Analogue Output Card Connections (0-10v, 4-20mA)

An analogue output is available on the connector in 0-10 V and
0(4)-20 mA size galvanically separated; the wiring diagram is shown in the following table:

Analogue current output:
Place jumper J14 in position 2-3 for 4-20mA current output, between pins: 11 (Current Out) and 9 (Current In)
Analogue voltage output:
Place jumper J14 in position 1-2 for voltage output, between pins: 12 Voltage Out and Pin 8 (GND)

ATTENTION
Technical characteristics:
Resolution = 10000 points
Accuracy = 0.05 % FS
Minimum output voltage load = 100 ohm
Maximum current output load = 250 ohm

7 ERROR MESSAGES

7.1 Indicator errors

Problem	Cause	Remedy
The indicator does not turn on by pressing the power key	The blue LED is off	Check the status of the green LED on the power supply unit: if it is on, check the correct insertion of the connector in point 9
The indicator does not turn on	Wrong key press	Press on the logo in the center of the key. When pressed, you can feel the key cover being pressed
Pressure on the touch screen has no effect	Uncalibrated display	Switch the indicator off and on again. Within 5 seconds of switching on press anywhere on the display. Perform the display calibration operations.

7.2 Scale Errors

Problem	Cause	Remedy
OVERLOAD	The scale is overloaded	Reduce the weight to a value lower than the maximum capacity so that it is suitable to the weighing area
UNDERLOAD	The scale is negative by at least 20 divisions. This message is only displayed if the scale is approved, otherwise, the weight preceded by the '-' character is displayed.	Press the reset key: →0← If the value does not reset to zero after pressing the key: 1) switch off the instrument and repeat the switching on operations; 2) inform the Service if the problem persists.
 - -	Non-resettable weight	Unload the scale
- - - - - -	Unstable weight	Remove the cause of weight instability and try to switch the indicator on again, or scale might need created in the metrological parameters.
- LOCK -	Instrument not reset correctly	Unload the scale

Problem	Cause	Remedy
- 01 - Faulty converter	Incorrect or missing load cell connection	Check extension cable, junction box and load cells
- 01 - Faulty converter	(*) Return signal from load cell out of range	Check that the load cell is efficient and that it works within its field of use
- 01 - Faulty converter	(*) Card breakage	Check the conversion card with a load cell simulator. If the test result is negative, replace the converter card
- 01 - Faulty converter	(**) Digital cells not responding	Check cell connections
- 02 - Error in parameter memory	Data error in card parameter memory	Check linearised Calibration parameters
- 06 -	(**) Serial number error on digital cell	Check the serial numbers and, if necessary, carry out angle calibration
- 07 -	(**) Breakage of a cell on multi-cell system	Replace the cell and carry out angle calibration or angle calibration for the individual cell
- 08 -	(**) Scale card breakage	Replace the scale card and carry out angle calibration or restore the indicator data. If installing a new card, go to metrological parameters, synchronize, and update scale serial number.
- 09 -	(**) First system switching on	Carry out angle calibration
- 10 -	(**) At least one cell not configured	Carry out angle calibration
- 11 -	(**) Digital cell power supply problems	Check cables and power supply voltage
- 12 -	(**) Digital cell power supply problems	Replace the load cell that signals the error
- 13 -	(**) Cell with internal temperature outside the range (-40 ÷ 100°C)	Replace the cell that signals the error. Carry out angle calibration for the replaced cell.
- 21 -	(**) Temporary digital cell error	--

8 PARAMETER CUSTOMISATION

Access the parameter customisation by pressing the **"TOOLS"** key to view all the parameters that contribute to the instrument operation.

Not all parameters are editable.
The non-editable parameters can be distinguished by the different colour of the text: by clicking on them, the change options are not shown.



ATTENTION
Customisations do not affect the weighing functions in any way, but can compromise, if not correctly performed, the operation of the entire weighing system as a weighing plant. Use only qualified and competent technicians for the modification of the operations indicated in this section.

9 ACCESS TO METROLOGICAL PARAMETERS

To access customisation of the metrological parameters (parameters more significantly linked to legal operation of the scale) you must press the calibration button or enter software seal password.

DANGER

All adjustment, installation, assembly and/or disassembly and/or scheduled or unscheduled maintenance operations must be carried out with equipment isolated from power sources in order to ensure the appropriate level of safety.

It is mandatory to use the Electrostatic Discharge Sensitive (EDS) cuff before performing any operation inside the indicator to avoid damaging the circuit boards or parts of the indicator

9.1 Version with connectors

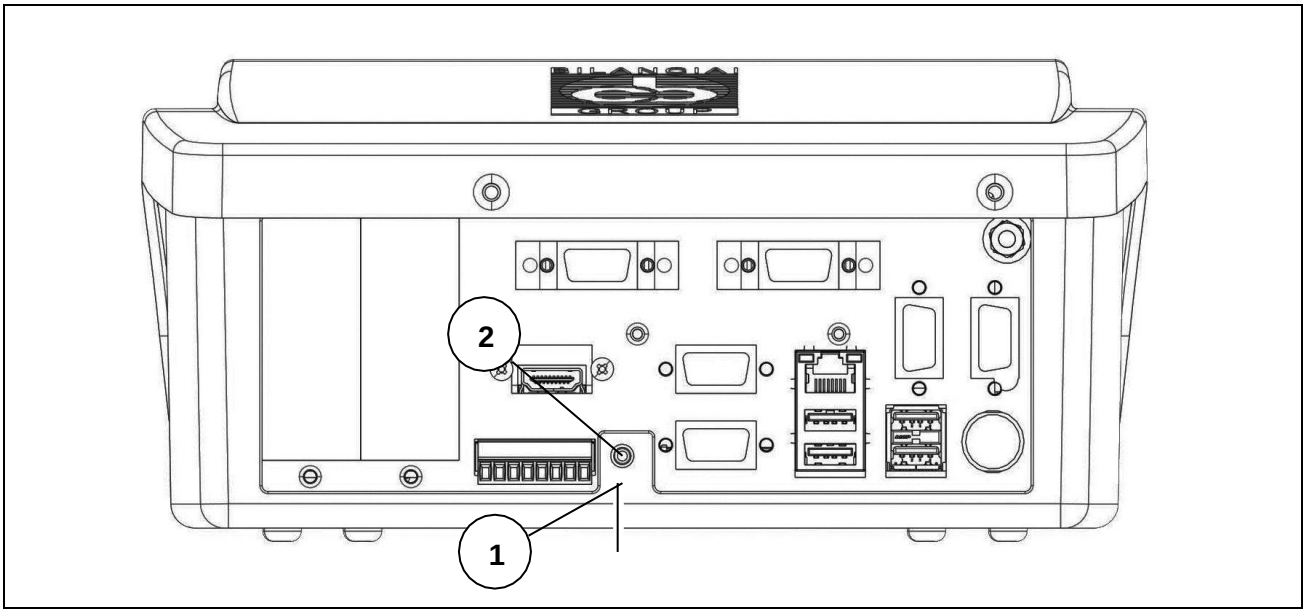

Figure 9.1-1 - Calibration button - Plastic indicator version

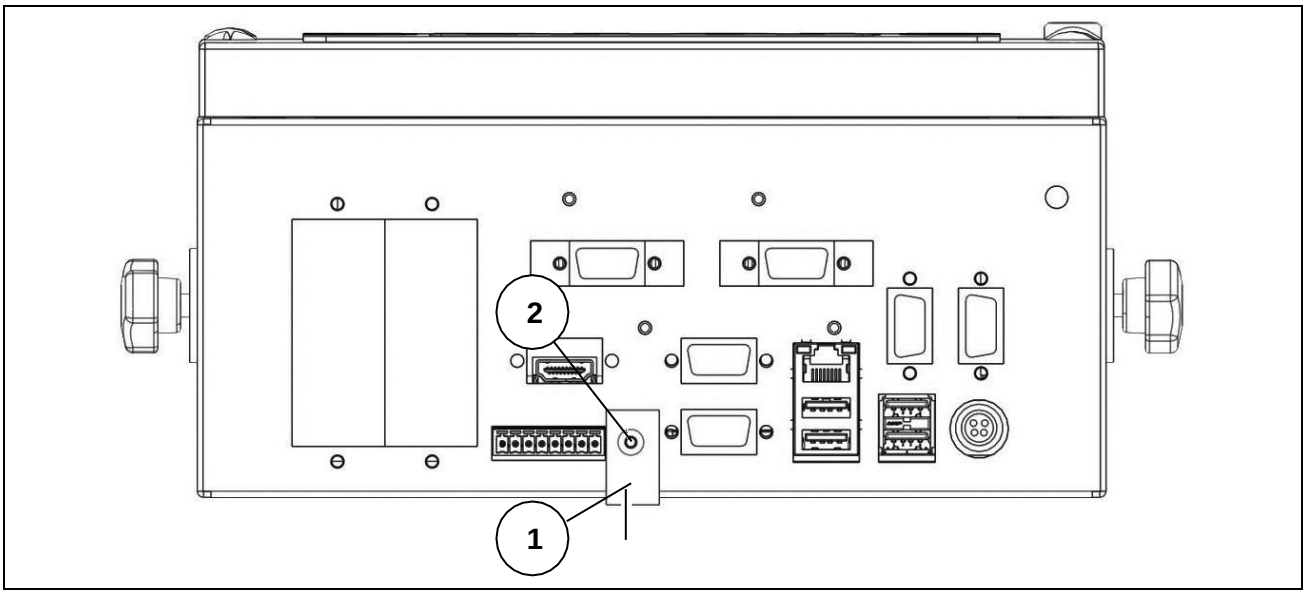

Figure 9.1-2 - Calibration button - Stainless steel indicator version

DANGER

It is mandatory to use the Electrostatic Discharge Sensitive (EDS) cuff before performing any operation inside the indicator to avoid damaging the circuit boards or parts of the indicator. For connections and technical information, refer to the diagrams and instructions in the manuals supplied.

Key:

1. Stamped self-adhesive label sealing the access hole to the calibration switch
2. Calibration switch

Referring to the previous figures, proceed as follows:

- Switch the indicator on.
- Remove the self-adhesive label (ref. 1) which seals the access hole to the calibration switch.
- Using a non-metal tool, press the calibration switch (ref. 2).

ATTENTION

Removing the metrological stamps makes it impossible to use the weighing indicator for commercial transactions towards third parties.

9.2 Version with cable glands

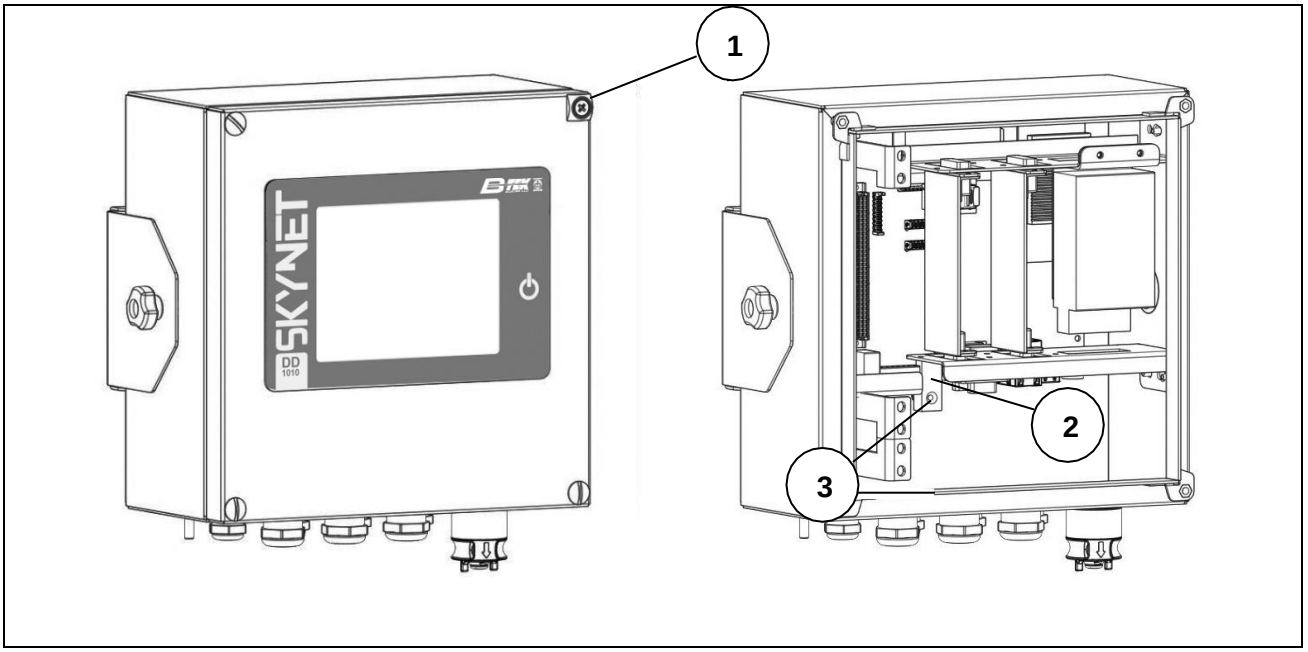

Figure 9.2-1 - Calibration button - Stainless steel indicator version

Key:

1. Indicator opening protection seal
2. Stamped self-adhesive label sealing the protective screw of the calibration switch
3. Calibration switch

Referring to the previous figure, proceed as follows:

- Switch the indicator on.

- Remove the seal (ref. 1), unscrew the four screws on the cover of the indicator and open it, being careful not to detach the display connector.
- Remove the self-adhesive label (ref. 2) which seals the access hole to the calibration switch.
- Using a non-metal tool, press the calibration switch (ref. 3).



ATTENTION

Removing the metrological stamps makes it impossible to use the weighing indicator for commercial transactions towards third parties.

9.3 Internal scale calibration

Follow the following path:

MENU

↓

TOOLS

↓

CONFIGURATION

↓

SYSTEM

↓

METROLOGICAL MANAGEMENT

↓

SCALE CONFIGURATION

↓

SCALE SELECTION

↓

CALIBRATION PROCEDURES

↓

Choose the type of Calibration and proceed according to the instructions displayed

10 DISASSEMBLING COMPONENTS

DANGER

All adjustment, installation, assembly and/or disassembly and/or scheduled or unscheduled maintenance operations must be carried out with equipment isolated from power sources in order to ensure the appropriate level of safety.

It is mandatory to use the Electrostatic Discharge Sensitive (EDS) cuff before performing any operation inside the indicator to avoid damaging the circuit boards or parts of the indicator

10.1 Disassembling support (only for stainless steel version)

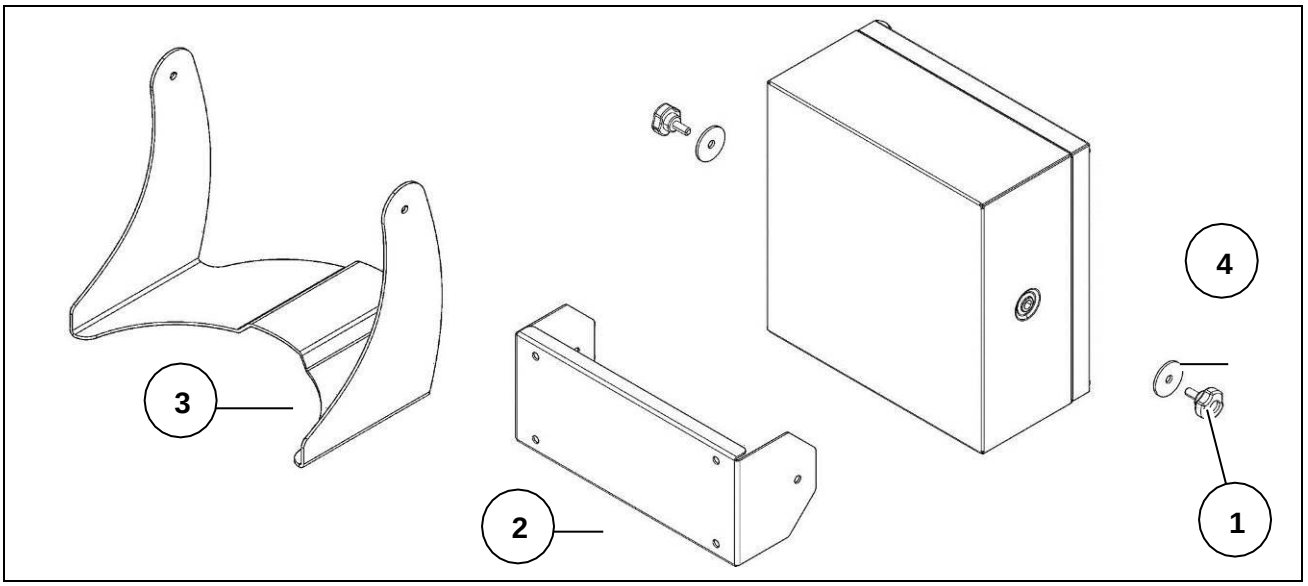

Figure 10.1-1 – Disassembling support

Referring to the previous figure, proceed as follows:

- Unscrew the fixing knobs (ref. 1).
- Remove the support (ref. 2 wall-mounted version) (ref. 3 tabletop version).
- Recover the washers (ref. 4) between the support and indicator.

10.2 Opening the indicator

10.2.1 Plastic version

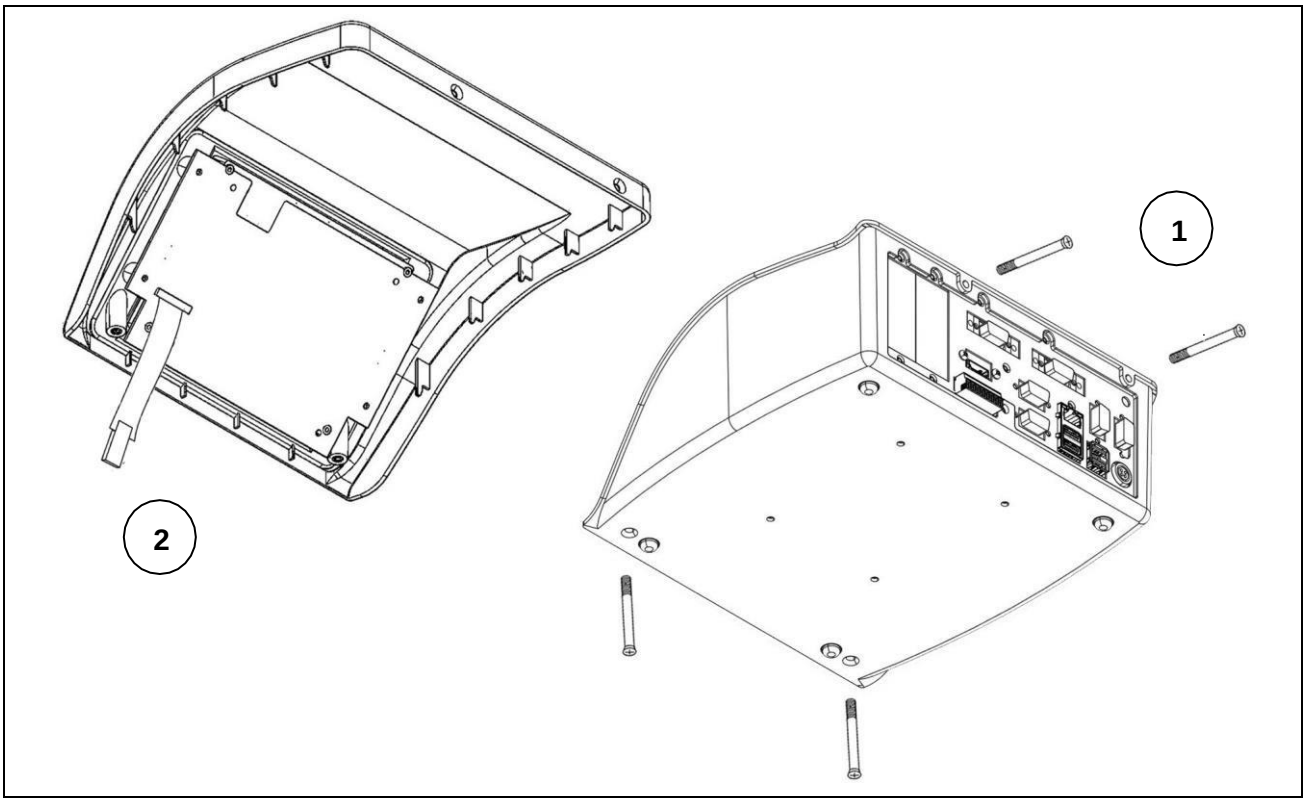

Figure 10.2-1 - Opening the indicator

Referring to the previous figure, proceed as follows:

- Remove the four screws (ref. 1) and rotate the cover forward, holding it up with one hand to avoid damaging the connections.
- Disconnect the connector from the display (ref. 2).
- Place the complete display cover on a work table.

DANGER

When performing installation or maintenance on components inside the indicator, always make sure that it is disconnected from the electrical mains.

10.2.2 Stainless steel version

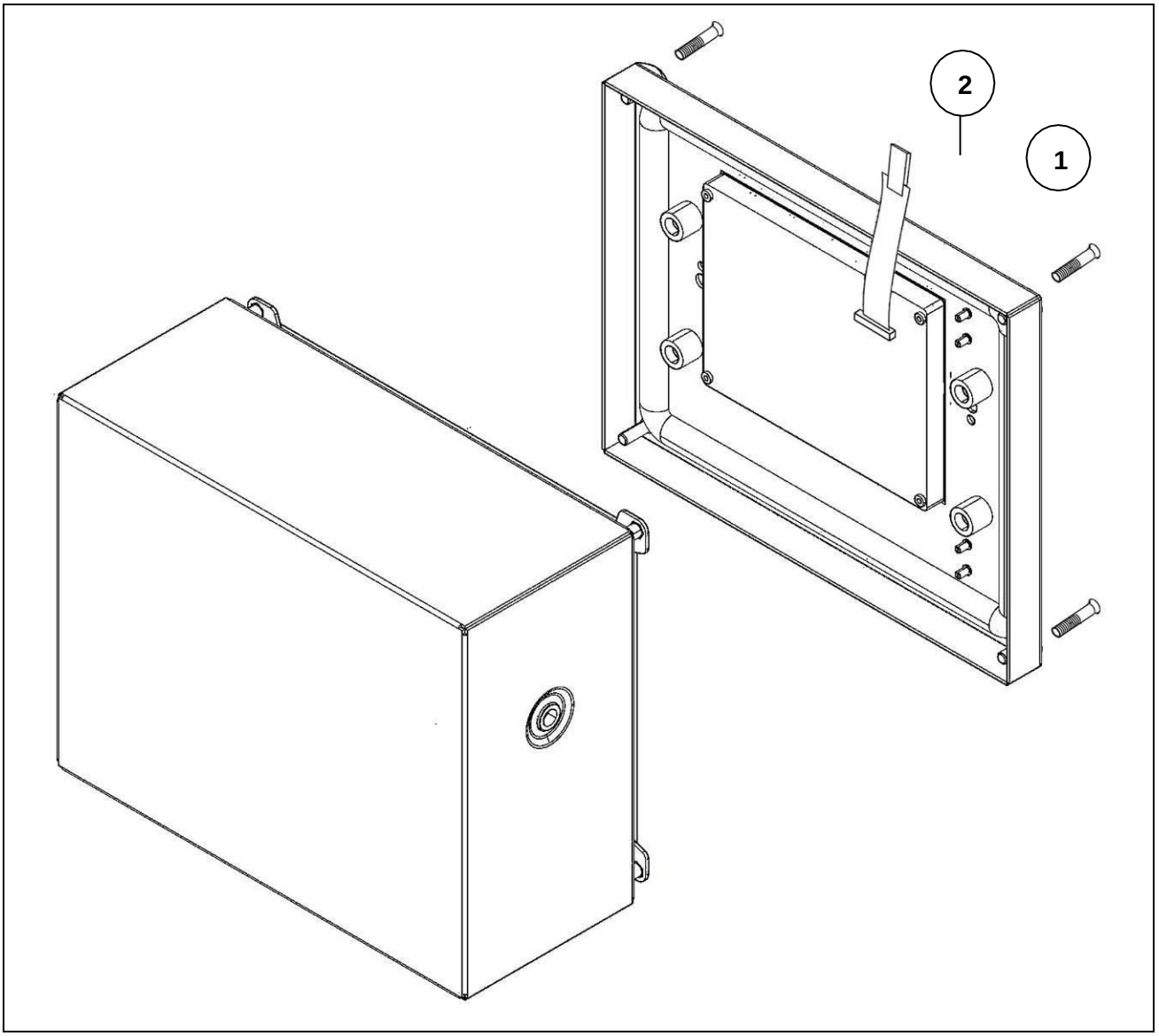

Figure 10.2-2 - Opening the indicator

Referring to the previous figure, proceed as follows:

- Remove the four screws (ref. 1) and rotate the side cover, holding it up with one hand to avoid damaging the connections.
- Disconnect the connector from the display (ref. 2).
- Remove the ground loop (in cable gland version)
- Place the complete display cover on a work table.

DANGER

When performing installation or maintenance on components inside the indicator, always make sure that it is disconnected from the electrical mains.

10.3 Disassembling front panel and display

10.3.1 Plastic version

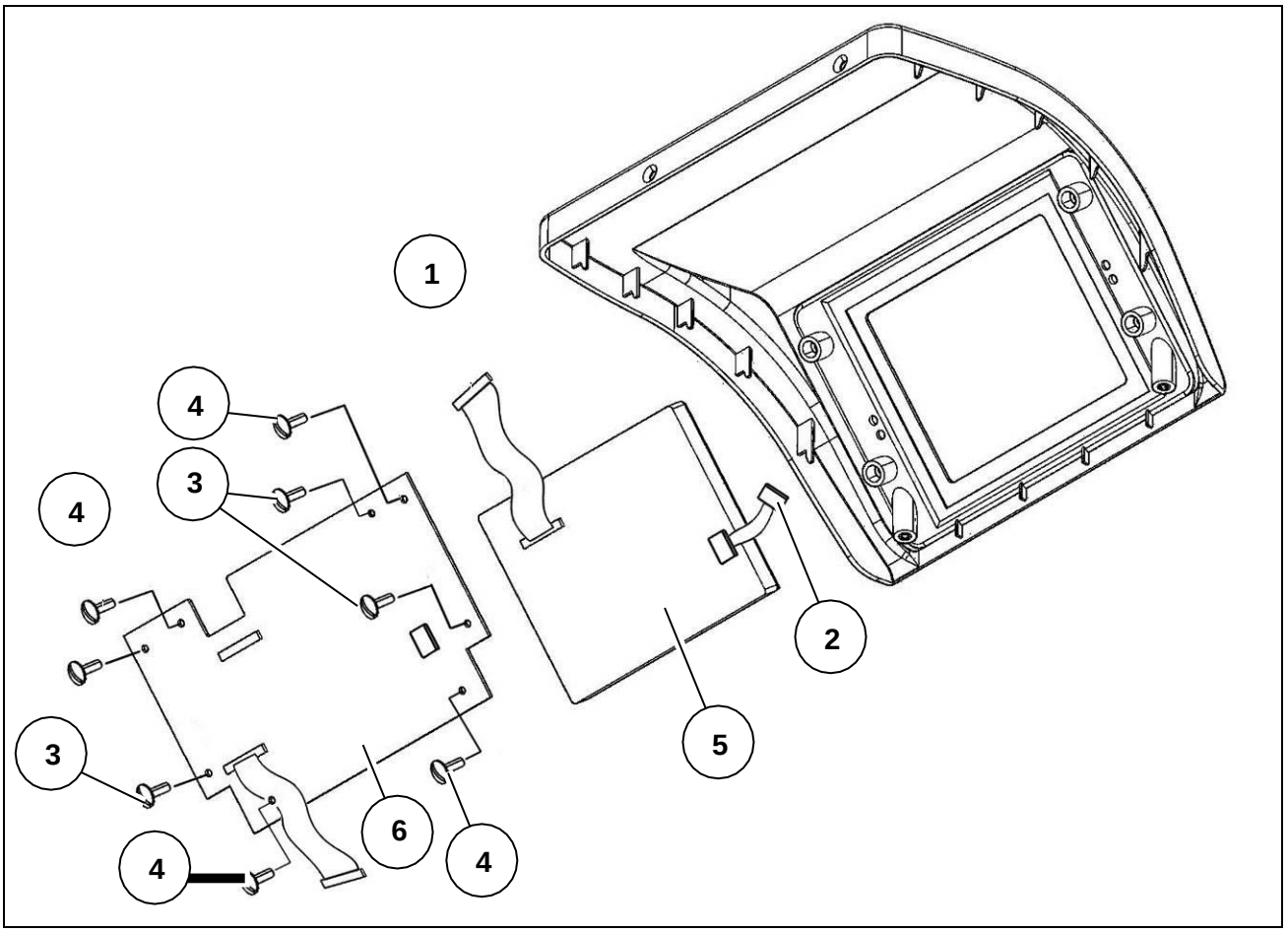

Figure 10.3-1 – Disassembling front panel and display

Referring to the previous figure, proceed as follows:

- Open the indicator.
- Disconnect the connectors (ref. 1 and 2)
- Unscrew the four screws (ref. 3) and remove the board complete with display from the front of the indicator
- Unscrew the four screws (ref. 4) and remove the display (ref. 5) from the card (ref. 6).

ATTENTION

When reassembling, make the wiring (ref. 1) between display and board fold with Z shape, as shown in the figure.

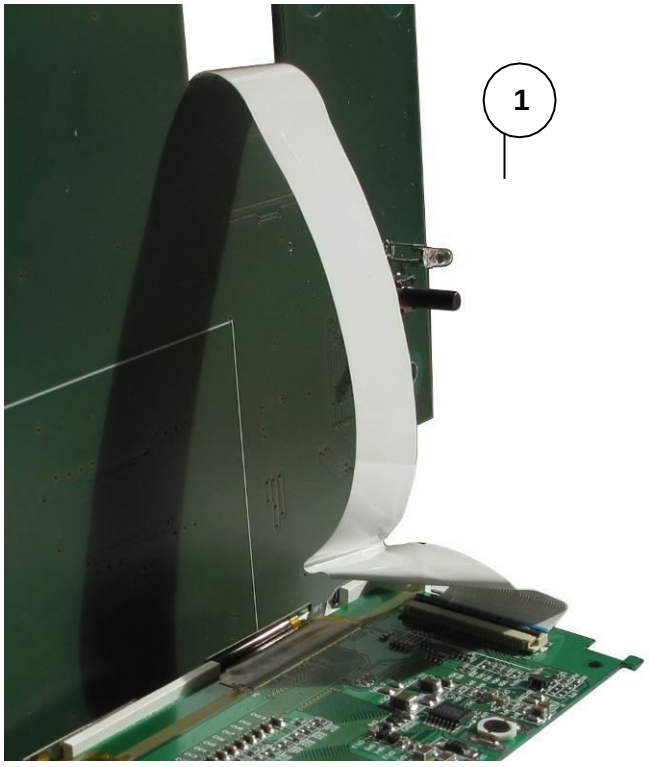

Figure 10.3-2 – Reassembling front panel and display

10.3.2 Stainless steel version

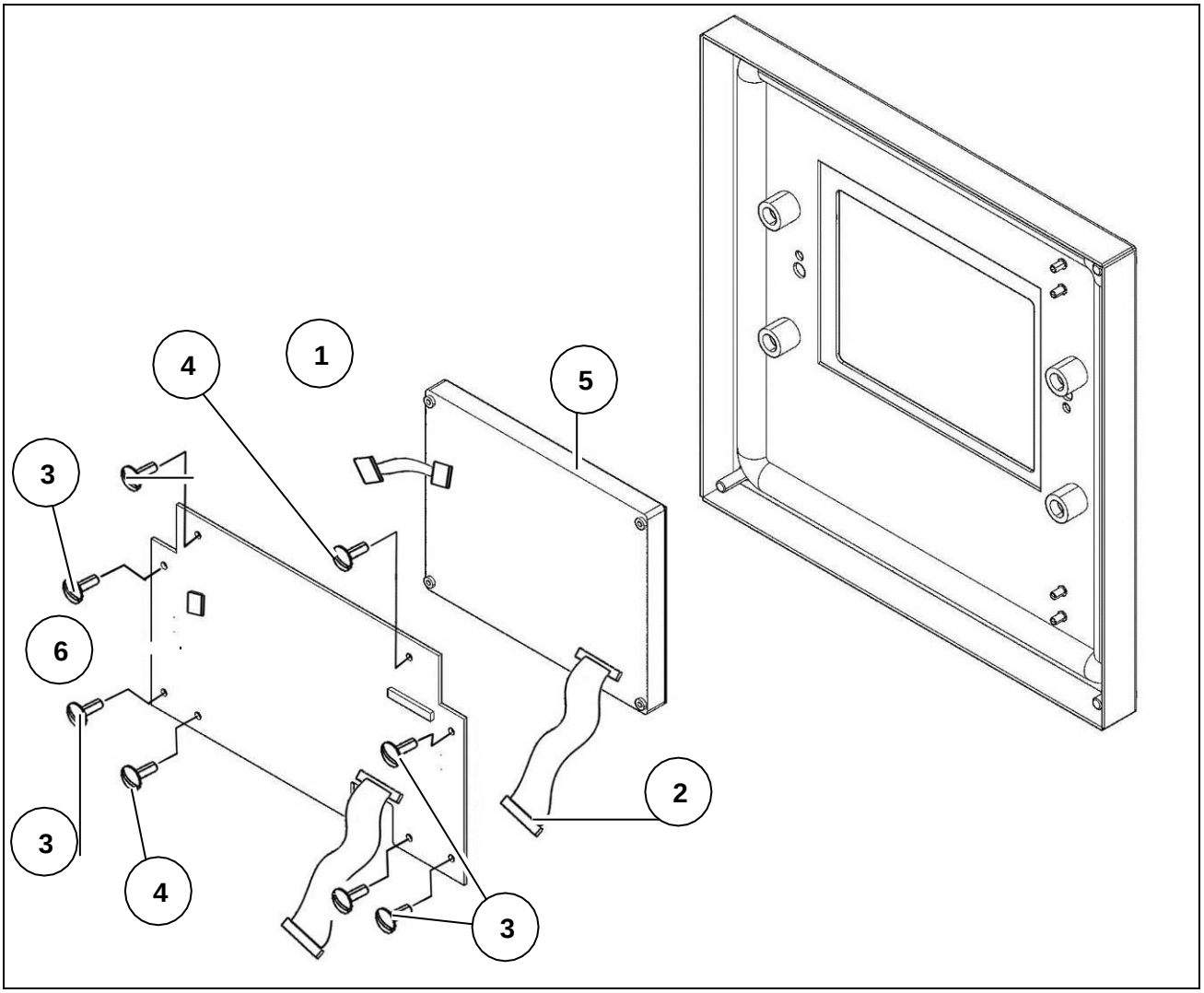

Figure 10.3-3 – Disassembling front panel and display

Referring to the previous figure, proceed as follows:

- Open the indicator.
- Disconnect the connectors (ref. 1 and 2)
- Unscrew the four screws (ref. 3) and remove the board complete with display from the front of the indicator
- Unscrew the four screws (ref. 4) and remove the display (ref. 5) from the card (ref. 6).

ATTENTION

When reassembling, make the wiring (ref. 1) between display and board fold with Z shape, as shown in the figure.

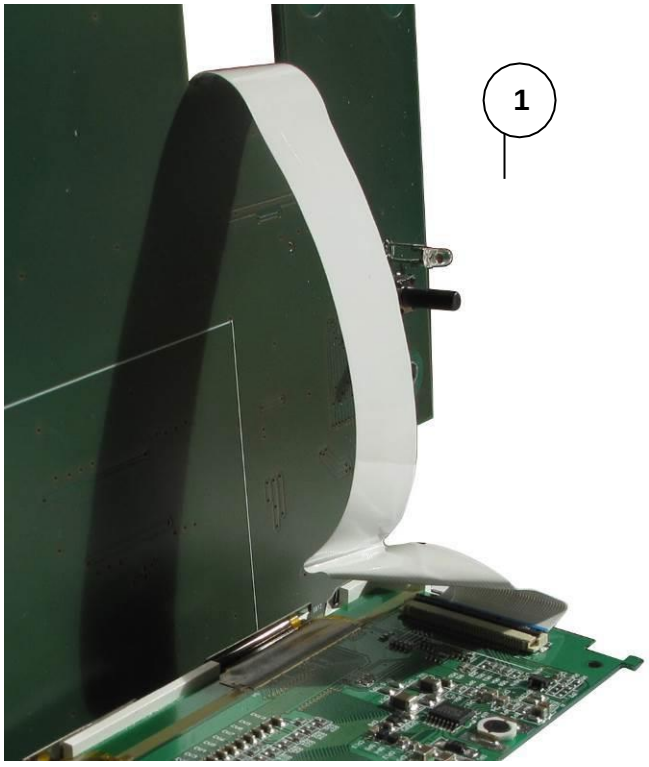

Figure 10.3. -4 – Reassembling front panel and display

10.4 Disassembling the indicator power supply unit

10.4.1 Stainless steel version with cable glands

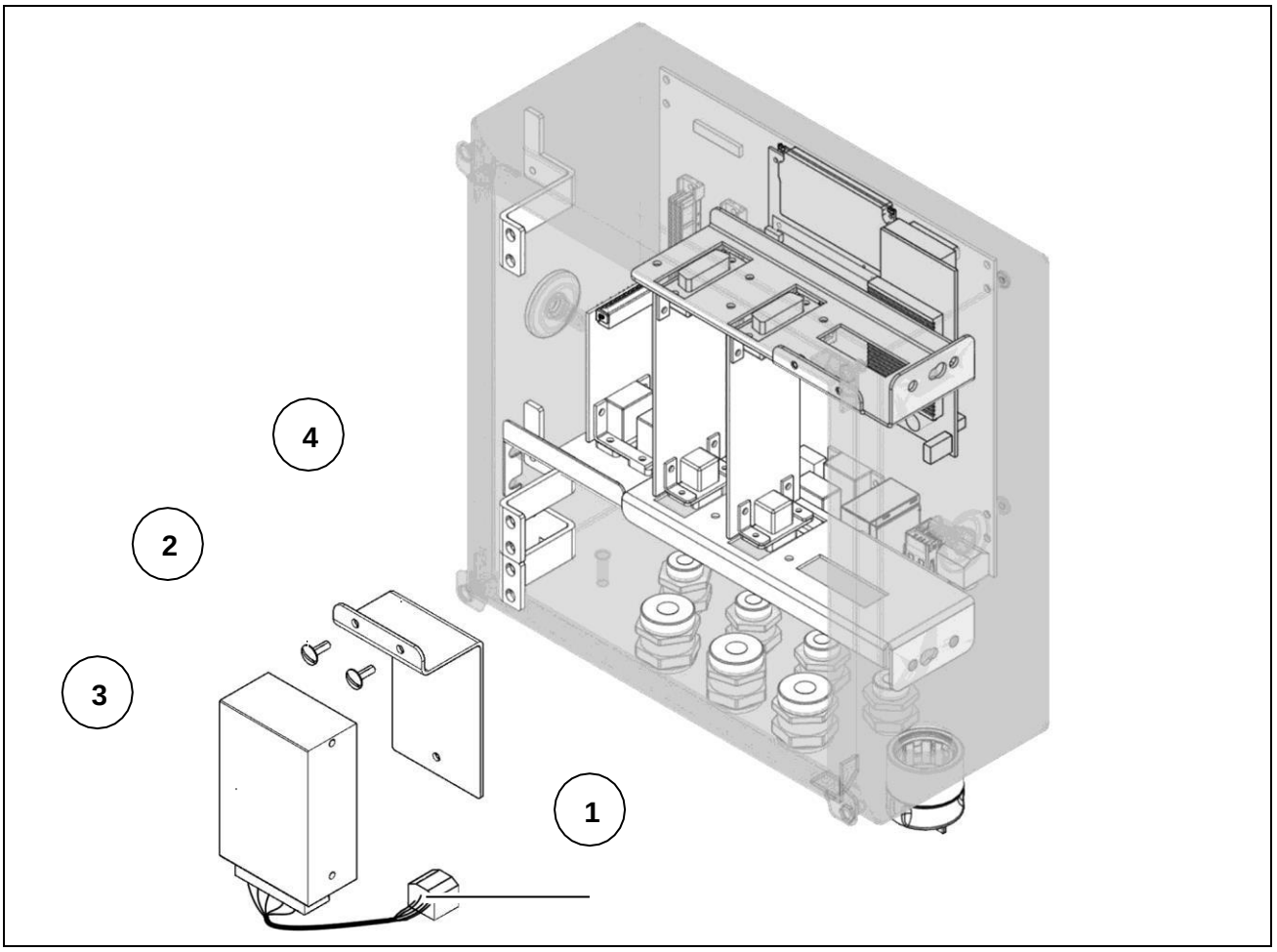

Figure 10.4-1 - Disassembling indicator power supply unit

Referring to the previous figure, proceed as follows:

- Open the indicator.
- Disconnect the main power supply socket and make sure that there is no voltage.
- Disconnect the connector (ref. 1) of the power supply unit from the card.
- Disconnect the main power cables from the input terminals.
- Unscrew the two screws (ref. 2) and remove the power supply unit with bracket.
- Separate the power supply (ref. 3) from the bracket (ref. 4)

10.5 Disassembling power supply unit for scale

10.5.1 Plastic version

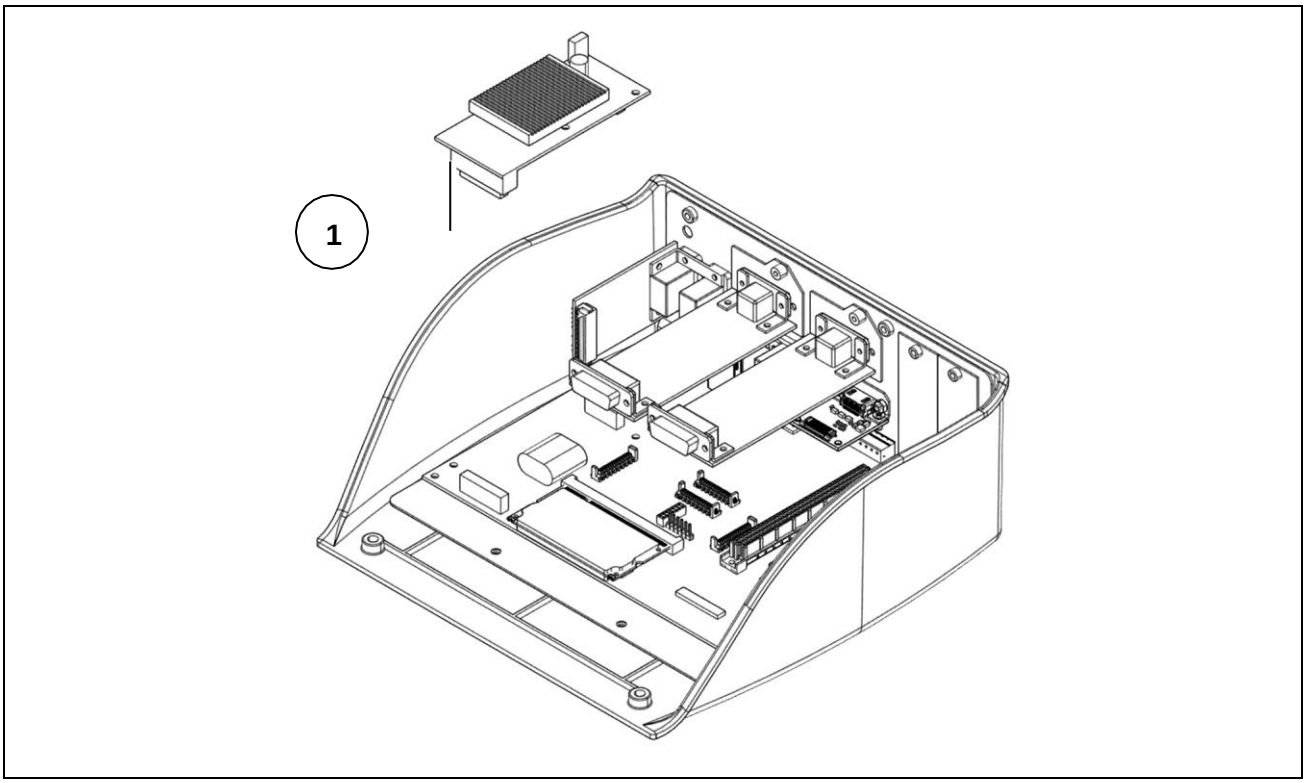

Figure 10.5-1 -Disassembling power supply for digital scale

Referring to the previous figure, proceed as follows:

- Open the indicator.
- Remove the power supply unit for digital scale (ref. 1) by gently pulling and acting on the plastic fastening rivets.

10.5.2 Stainless steel version

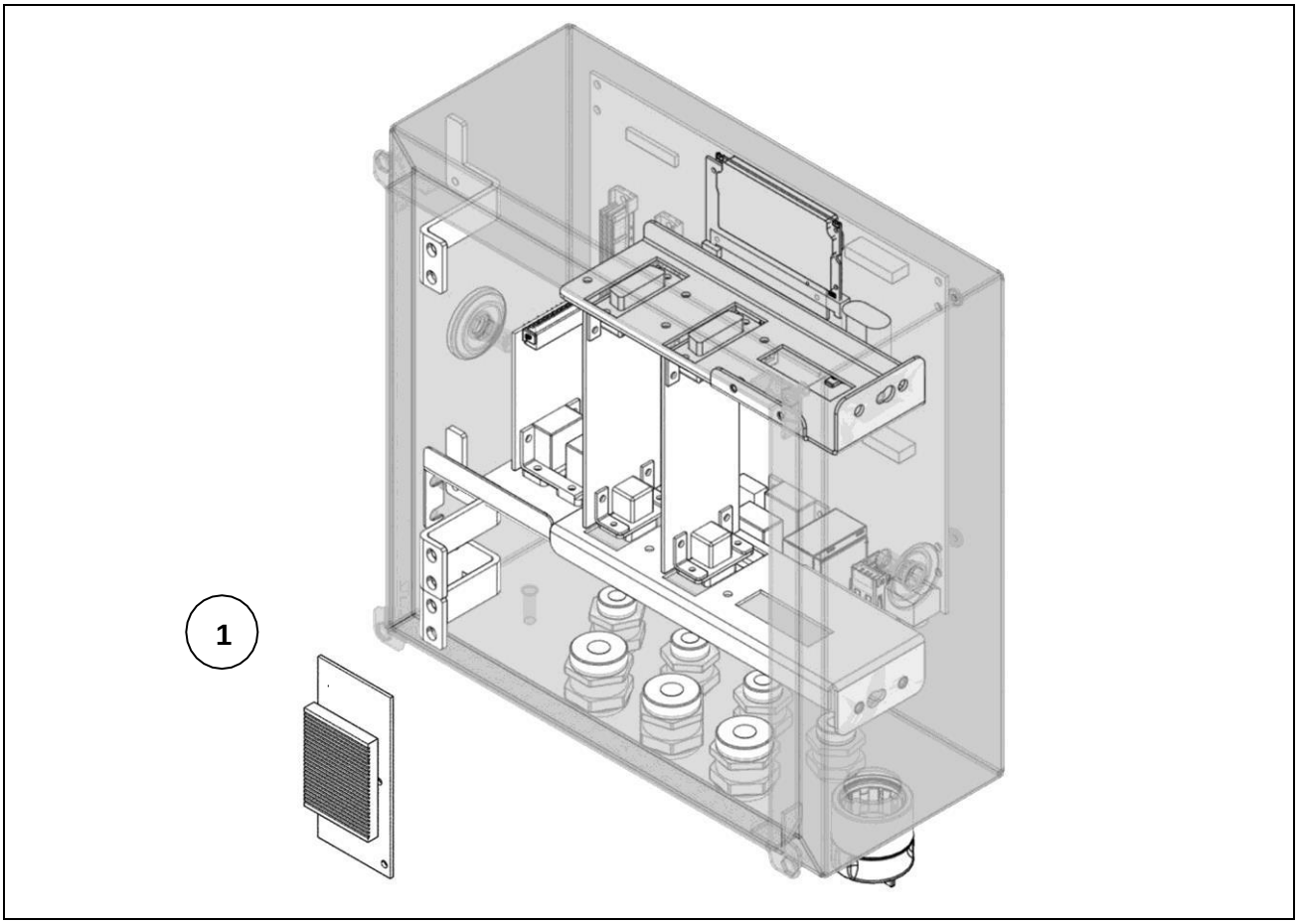

Figure 10.5-2 -Disassembling power supply for digital scale

Referring to the previous figure, proceed as follows:

- Open the indicator.
- Remove the power supply unit for digital scale (ref. 1) by gently pulling and acting on the plastic fastening rivets.

10.6 Disassembling lithium battery

10.6.1 Plastic version

WARNING
If the time and date are missing when the indicator is switched on, the lithium battery must be replaced.

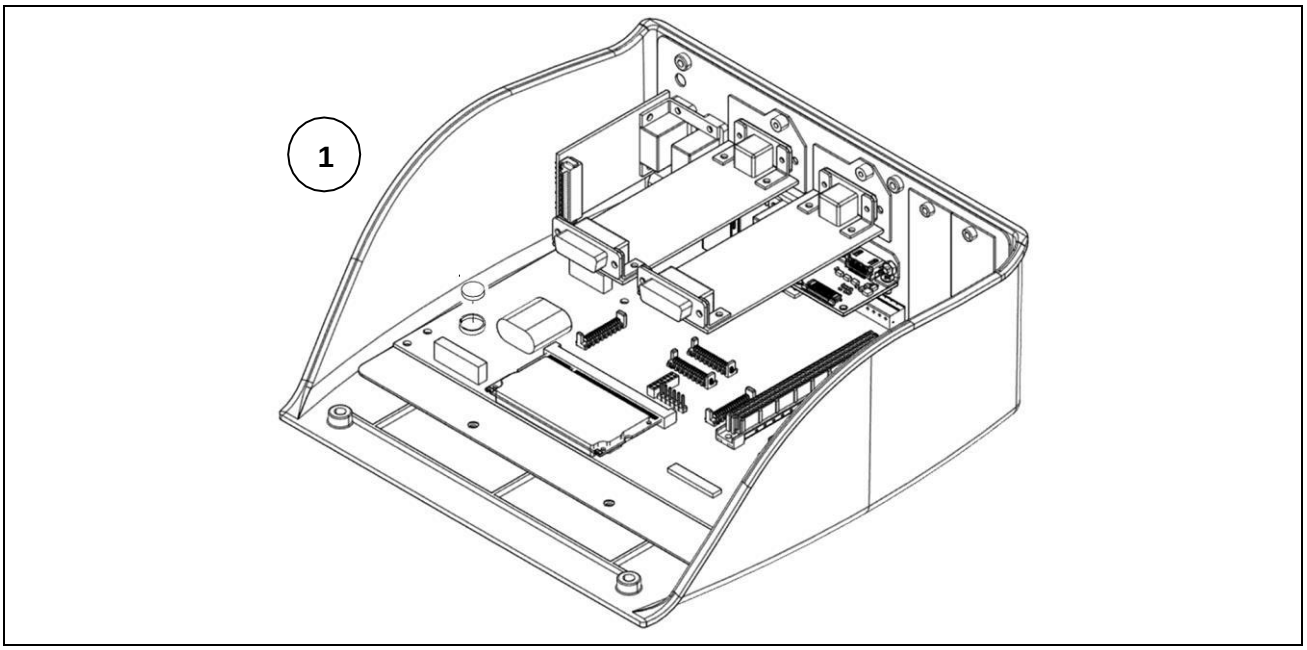

Figure 10.6-1 - Disassembling lithium battery

Referring to the previous figure, proceed as follows:

- Switch the indicator off and disconnect it from the electrical mains.
- Open the indicator.
- Remove the power supply unit for scale.
- Remove the lithium battery (ref. 1) being careful not to cause short circuits.

ATTENTION
Take special care to avoid dropping the battery on the motherboard, as it may damage some parts of the motherboard or the entire card.

- Replace with a battery identical to the one removed from the equipment (model CR2450).

ATTENTION
Dispose of the battery via separate waste collection either handing it over to the distributor or to separate waste collection centers.

10.6.2 Stainless steel version with connectors

WARNING
If the time and date are missing when the indicator is switched on, the lithium battery must be replaced.

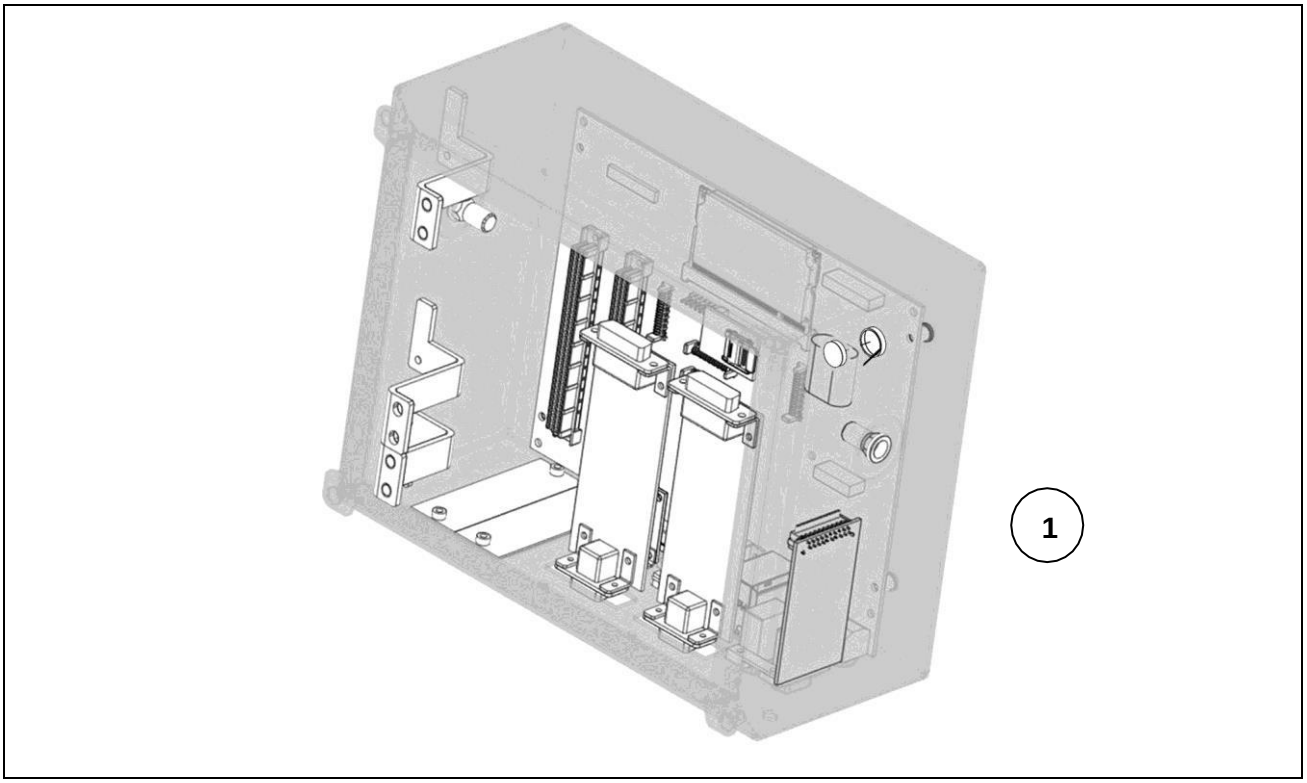

Figure 10.6-2 - Disassembling lithium battery

Referring to the previous figure, proceed as follows:

- Switch the indicator off and disconnect it from the electrical mains.
- Open the indicator.
- Remove the power supply unit for scale.
- Remove the lithium battery (ref. 1) being careful not to cause short circuits.

ATTENTION
Take special care to avoid dropping the battery on the motherboard, as it may damage some parts of the motherboard or the entire card.

- Replace with a battery identical to the one removed from the equipment (model CR2450).

ATTENTION
Dispose of the battery via separate waste collection either handing it over to the distributor or to separate waste collection centers.

10.6.3 Stainless steel version with cable glands

WARNING
If the time and date are missing when the indicator is switched on, the lithium battery must be replaced.

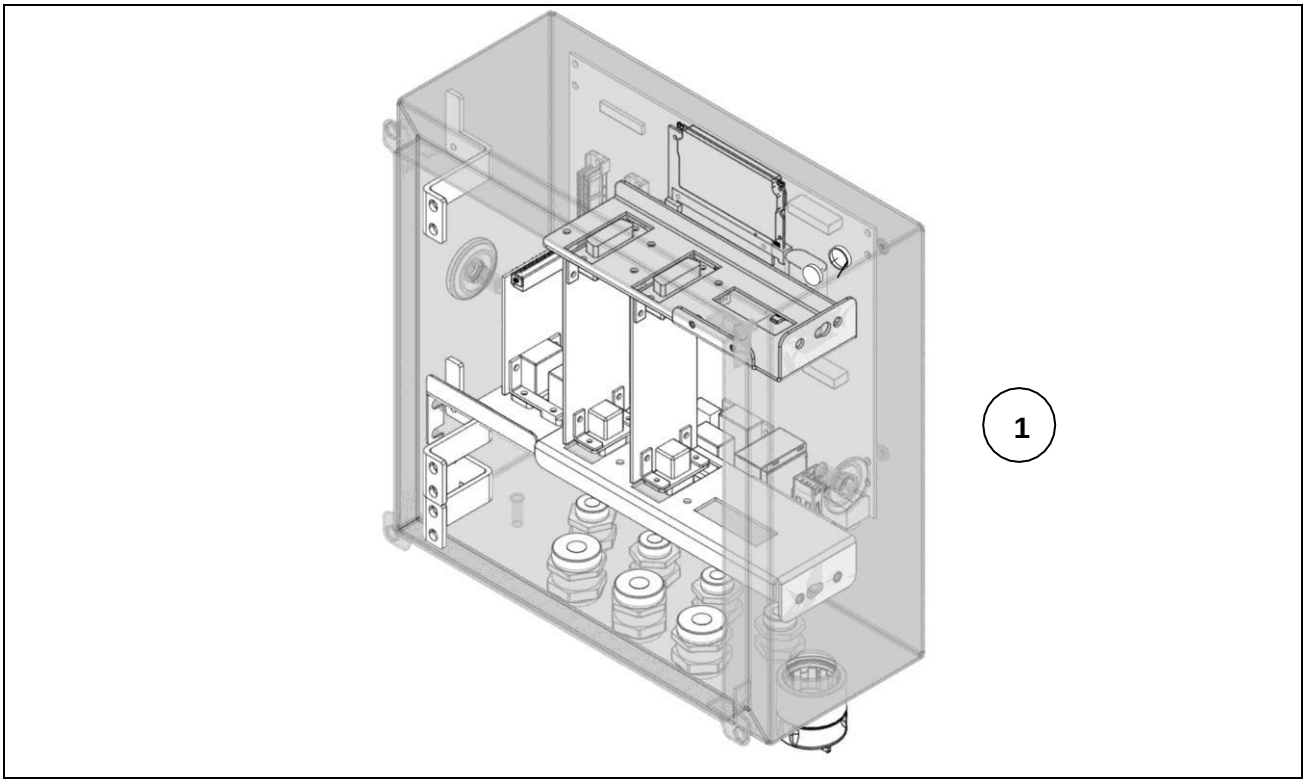

Figure 10.6-3 - Disassembling lithium battery

Referring to the previous figure, proceed as follows:

- Switch the indicator off and disconnect it from the electrical mains.
- Open the indicator.
- Remove the indicator power supply unit.
- Remove the power supply unit for scale.
- Remove the lithium battery (ref. 1) being careful not to cause short circuits.

ATTENTION
Take special care to avoid dropping the battery on the motherboard, as it may damage some parts of the motherboard or the entire card.

- Replace with a battery identical to the one removed from the equipment (model CR2450).

ATTENTION
Dispose of the battery via separate waste collection either handing it over to the distributor or to separate waste collection centers.

10.7 Disassembling weighing cell unit and indicator power supply unit (stainless steel version with cable glands only)

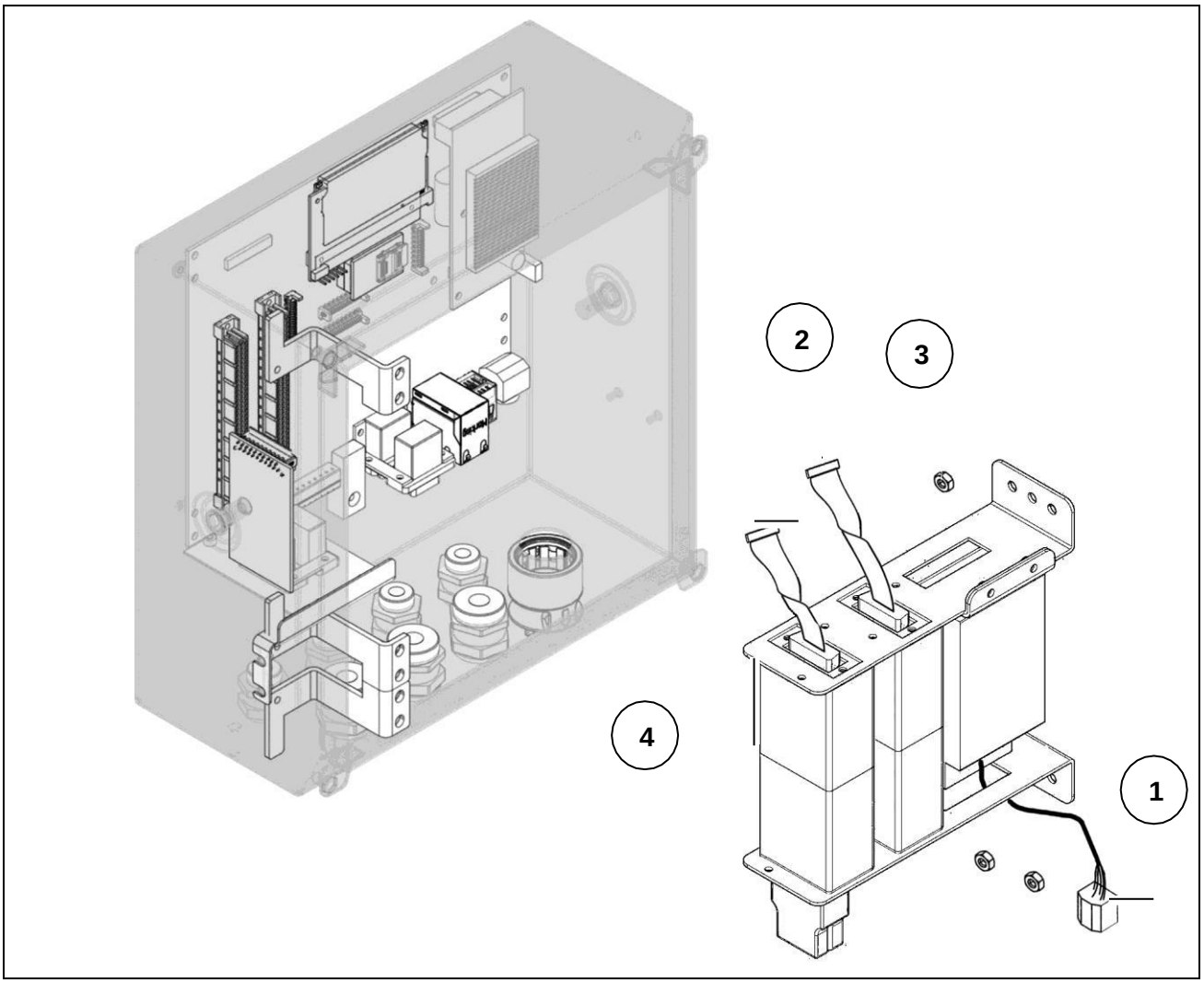

Figure 10.7-1 - Disassembling weighing cell unit and indicator power supply unit

Referring to the previous figure, proceed as follows:

- Open the indicator.
- Disconnect the connector (ref. 1) of the power supply unit from the card.
- Disconnect the connectors from the weighing cells (ref. 2)
- Unscrew the four nuts (ref. 3) and remove the weighing cell and indicator power supply unit complete with brackets (ref. 4).

10.8 Disassembling CPU module

10.8.1 Plastic version

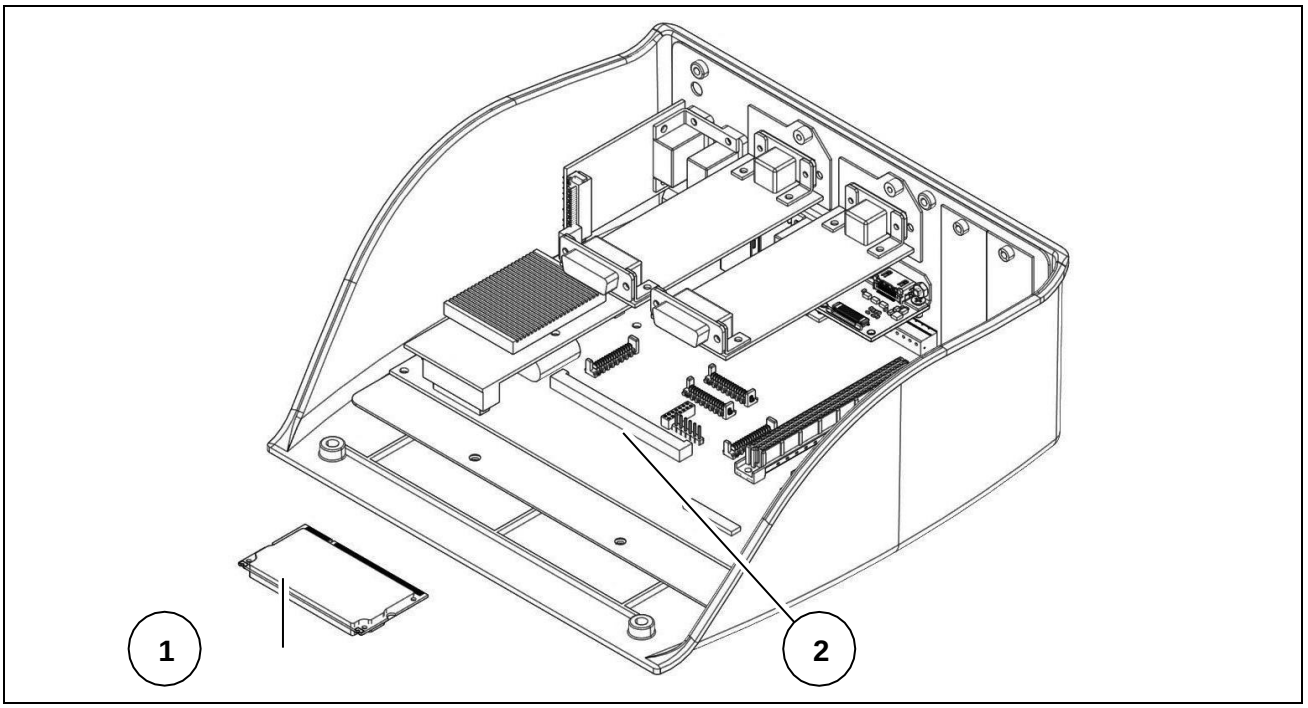

Figure 10.13-1 – Disassembling CPU

Referring to the previous figure, proceed as follows:

- Open the indicator.
- Remove the CPU (ref. 1) from the motherboard (ref. 2).

10.8.2 Stainless steel version with connectors/cable glands

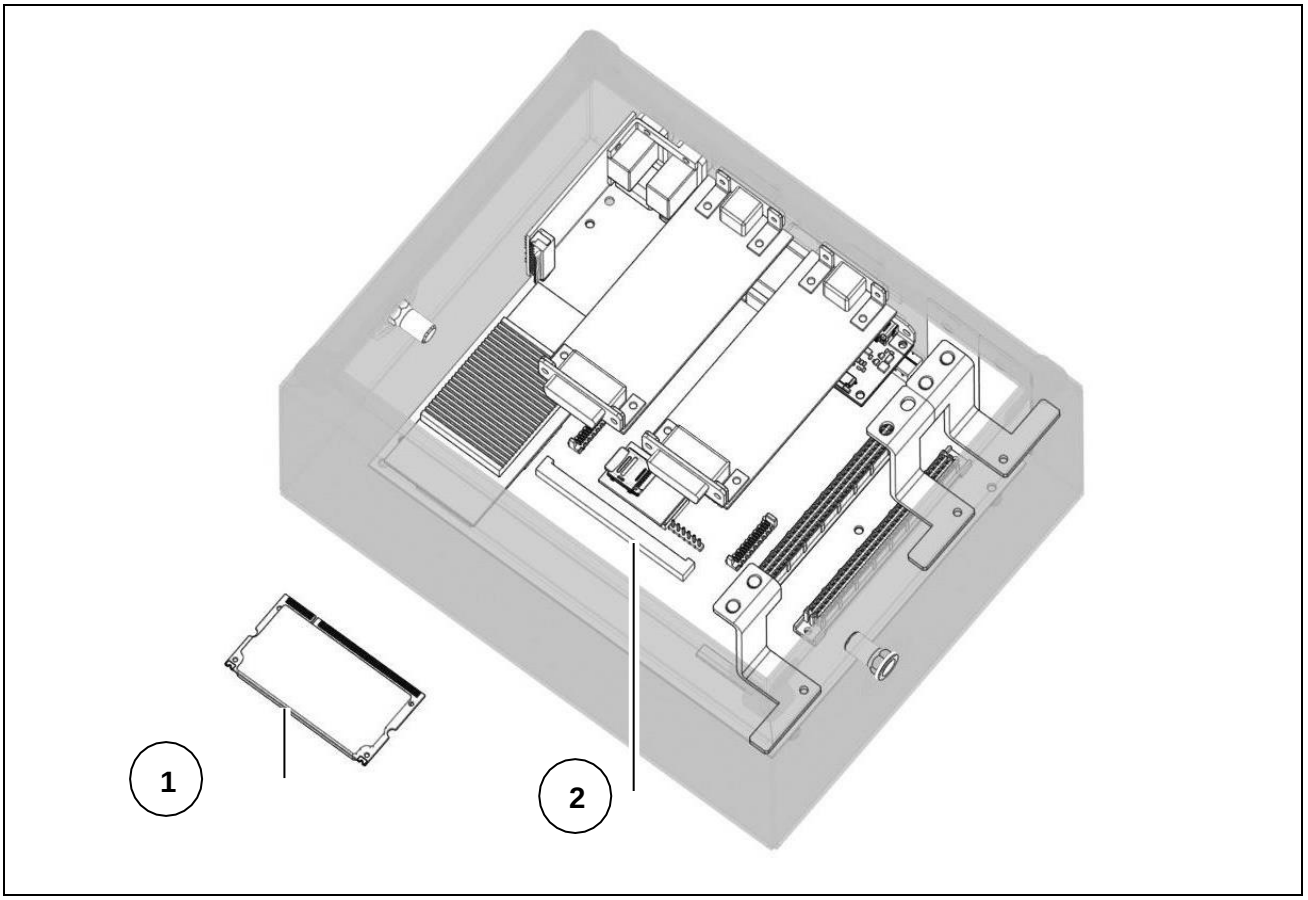

Figure 10.13-2 – Disassembling CPU

Referring to the previous figure, proceed as follows:

- Open the indicator.
- Remove the CPU (ref. 1) from the motherboard (ref. 2).

10.9 Disassembling digital scale input

10.9.1 Plastic version

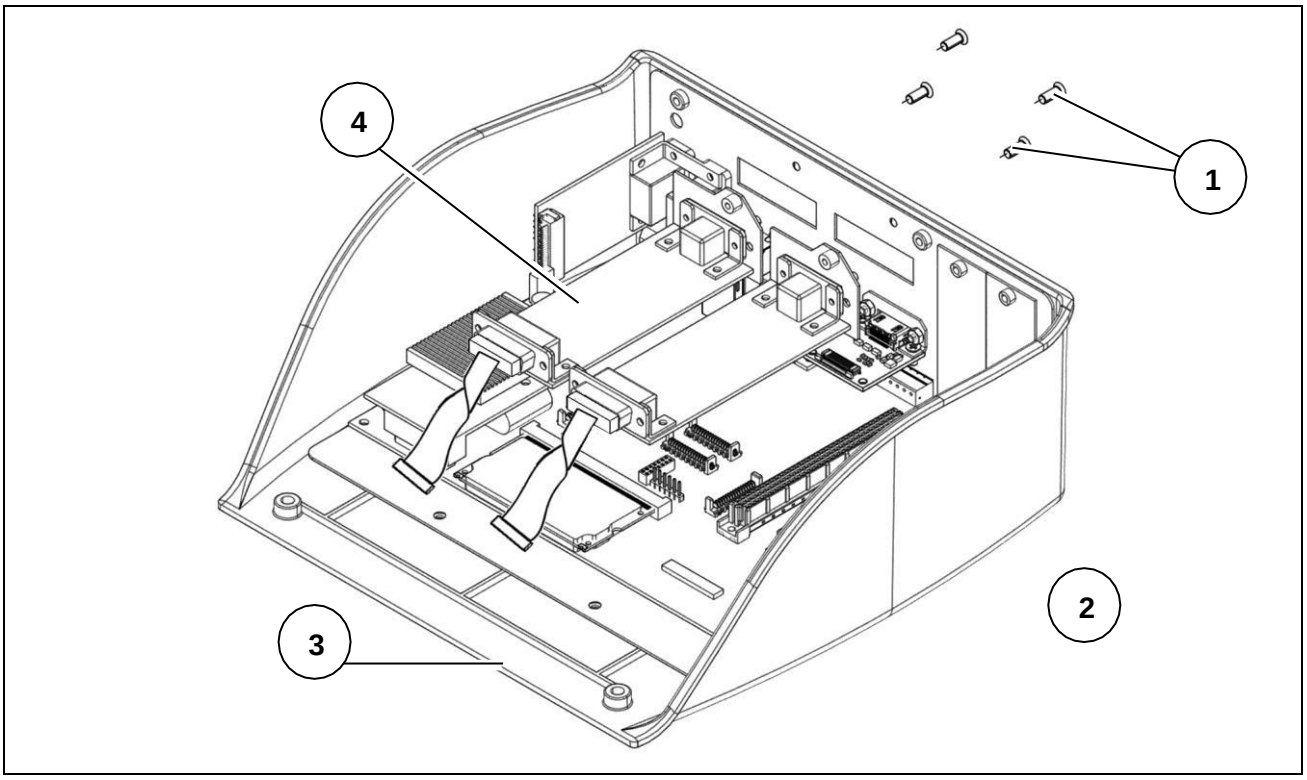

Figure 10.9-1 - Disassembling digital scale input

Referring to the previous figure, proceed as follows:

- Open the indicator.
- Unscrew the screws (ref. 1) and release the card (ref. 2).
- Disconnect the connector (ref. 3) from its equivalent on the motherboard.
- If there is a second card (ref. 4) repeat the procedure described above.

10.9.2 Stainless steel version with connectors

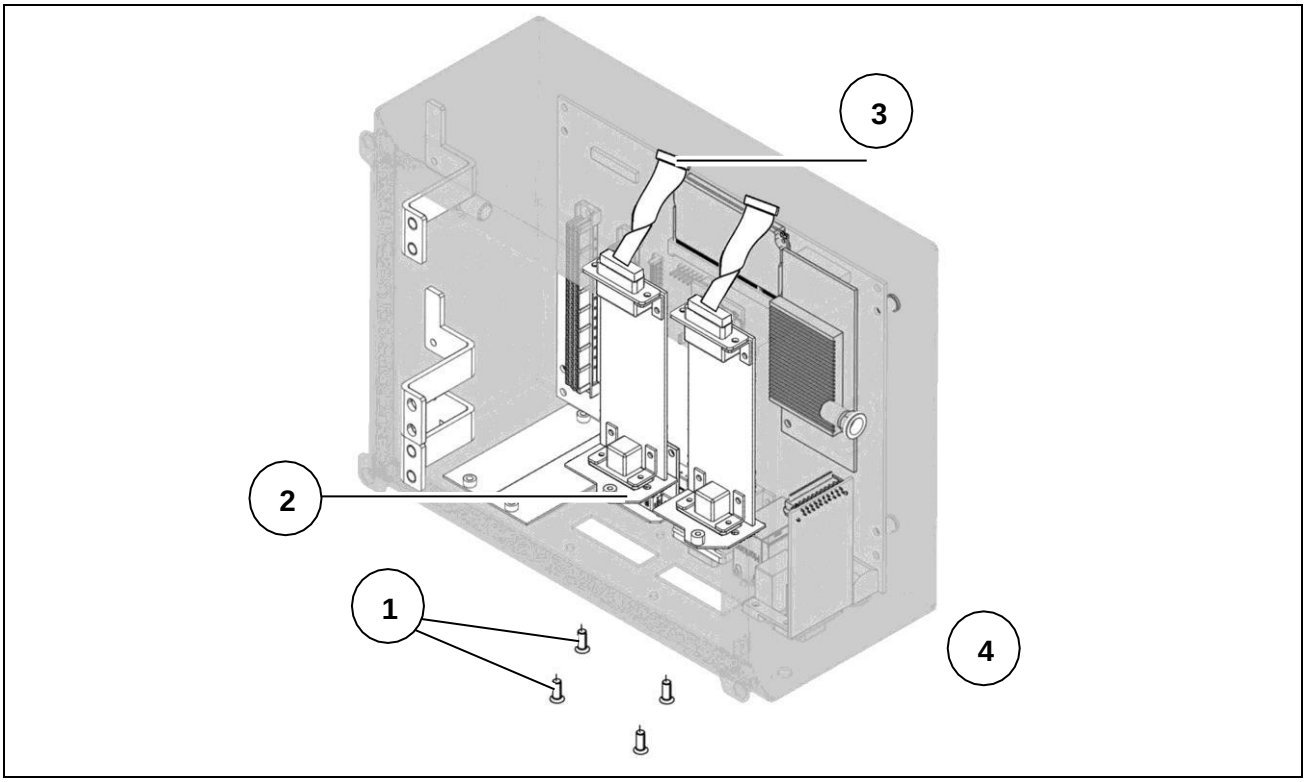

Figure 10.9-2 - Disassembling digital scale input

Referring to the previous figure, proceed as follows:

- Open the indicator.
- Unscrew the screws (ref. 1) and release the card (ref. 2).
- Disconnect the connector (ref. 3) from its equivalent on the motherboard.
- If there is a second card (ref. 4) repeat the procedure described above.

10.9.3 Stainless steel version with cable glands

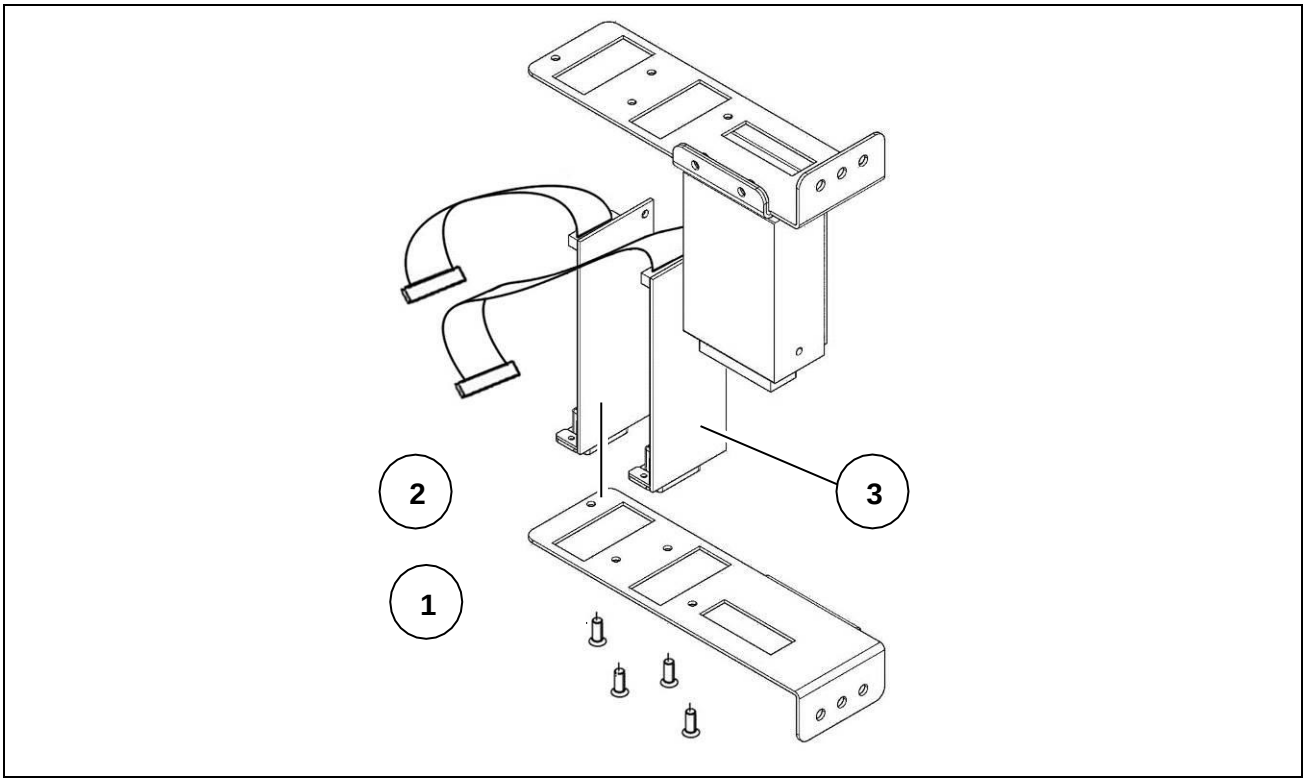

Figure 10.9-3 - Disassembling digital scale input

Referring to the previous figure, proceed as follows:

- Open the indicator.
- Remove the weighing cell and indicator power supply unit complete with brackets.
- Unscrew the screws (ref. 1) and release the card (ref. 2).
- If there is a second card (ref. 3) repeat the procedure described above.

10.10 Disassembling analogue scale input

10.10.1 Plastic version

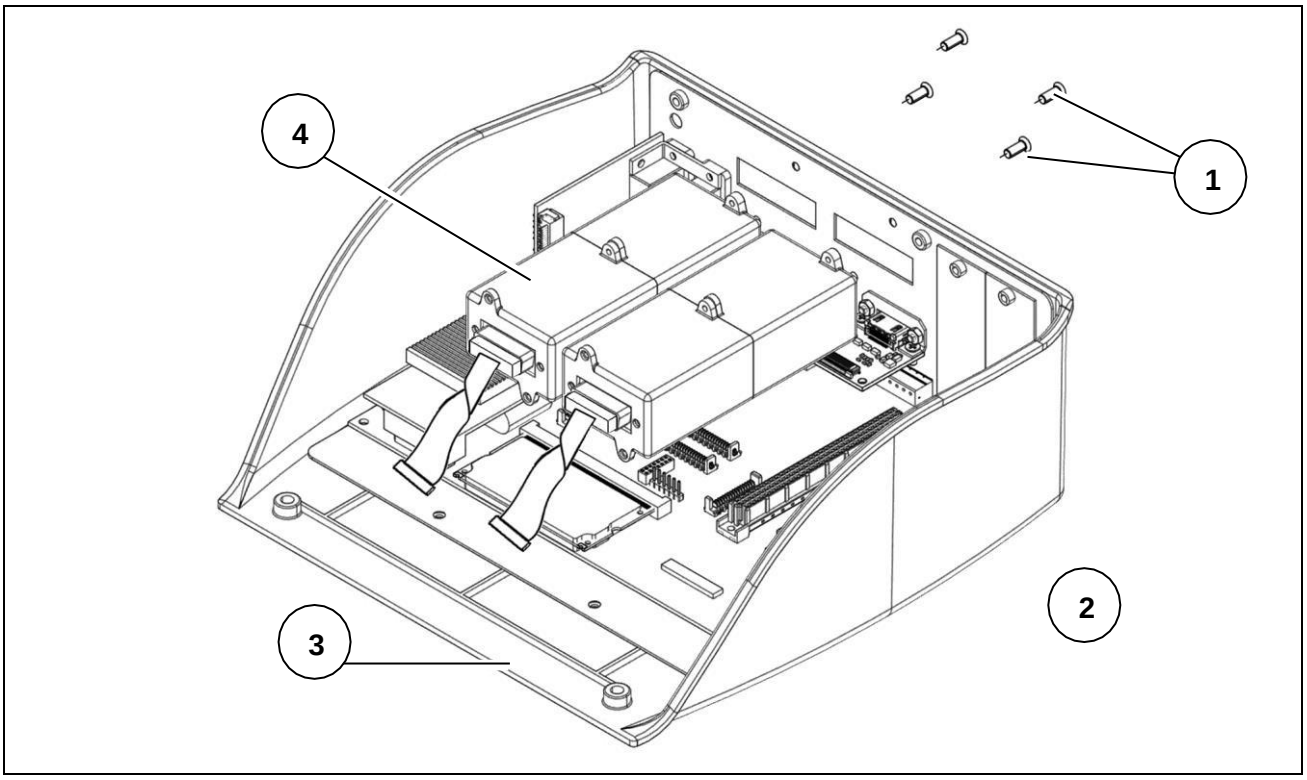

Figure 10.10-1 - Disassembling analogue scale input

Referring to the previous figure, proceed as follows:

- Open the indicator.
- Unscrew the screws (ref. 1) and release the card (ref. 2).
- Disconnect the connector (ref. 3) from its equivalent on the motherboard.
- If there is a second card (ref. 4) repeat the procedure described above.

10.10.2 Stainless steel version with connectors

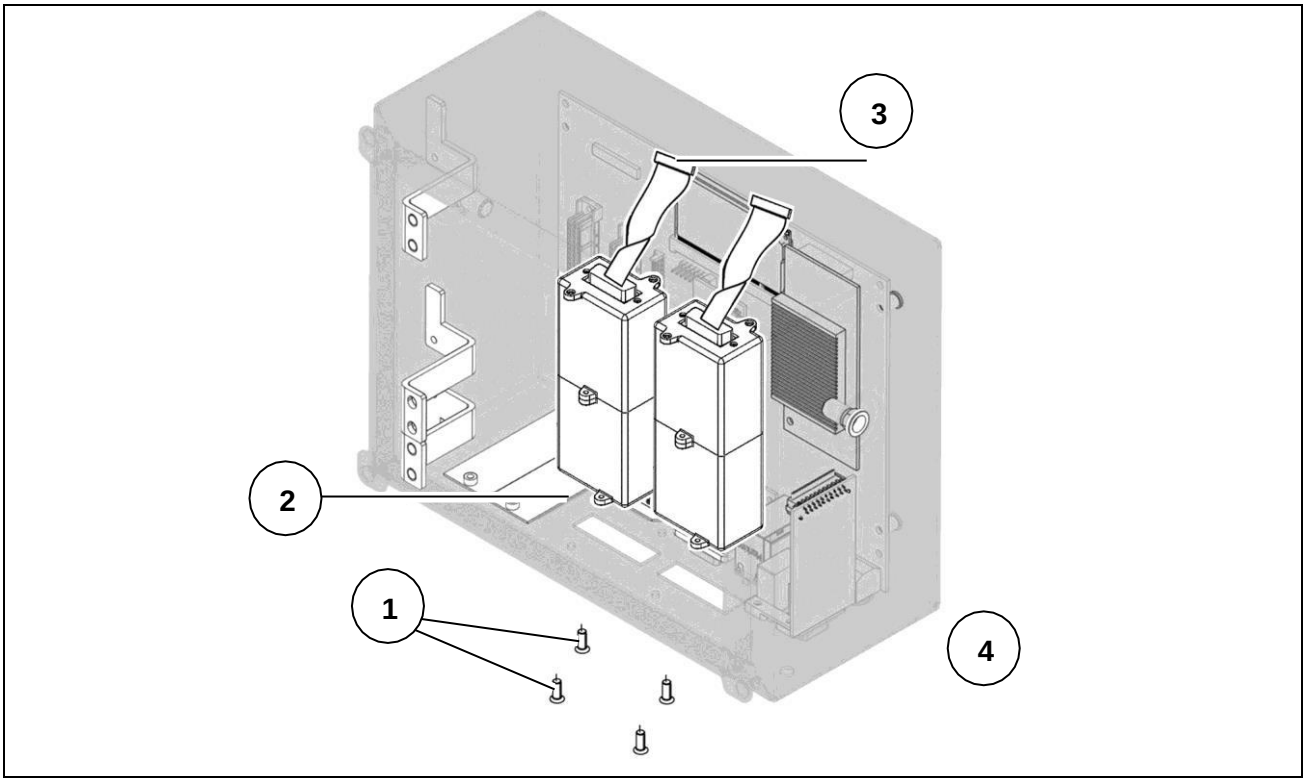

Figure 10.10-2 - Disassembling analogue scale input

Referring to the previous figure, proceed as follows:

- Open the indicator.
- Unscrew the screws (ref. 1) and release the card (ref. 2).
- Disconnect the connector (ref. 3) from its equivalent on the motherboard.
- If there is a second card (ref. 4) repeat the procedure described above.

10.10.3 Stainless steel version with cable glands

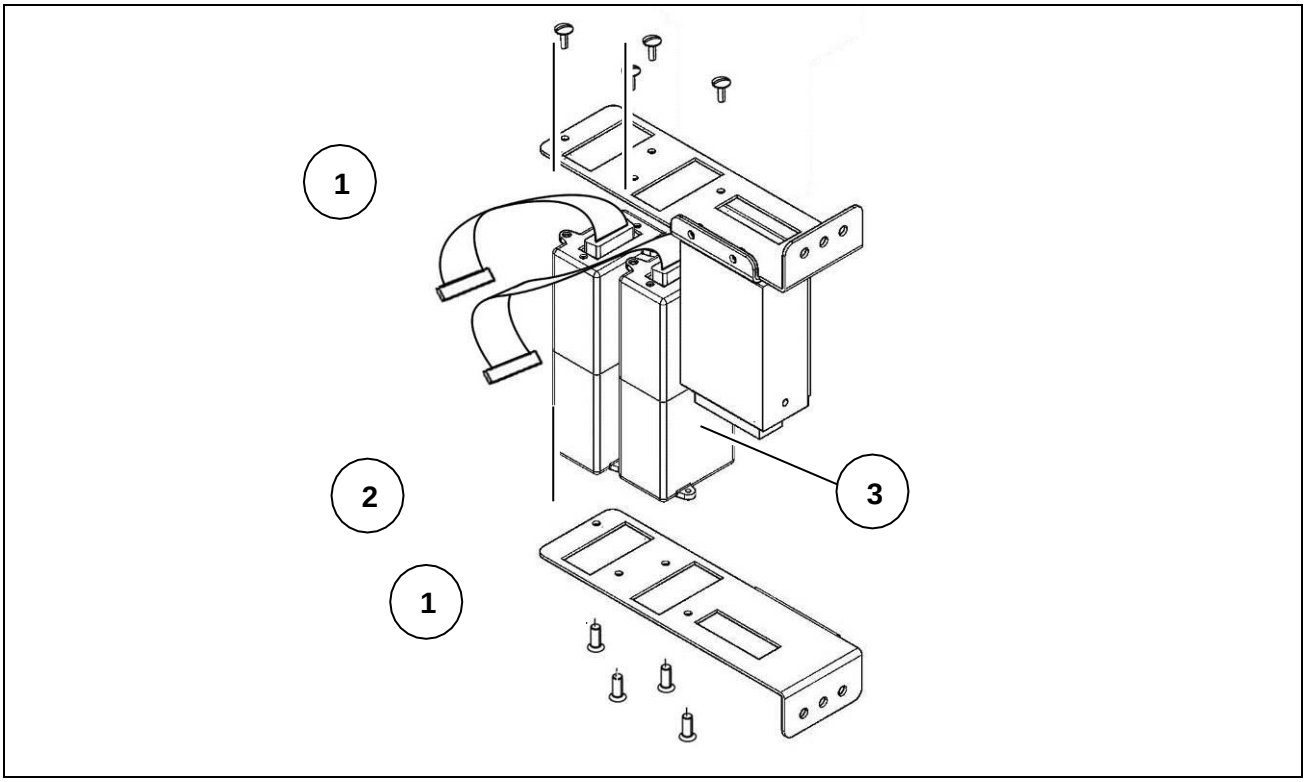

Figure 10.10-3 - Disassembling analogue scale input

Referring to the previous figure, proceed as follows:

- Open the indicator.
- Remove the weighing cell and indicator power supply unit complete with brackets.
- Unscrew the screws (ref. 1) and release the card (ref. 2).
- If there is a second card (ref. 3) repeat the procedure described above.

10.11 Disassembling serial expansion card

10.11.1 Plastic version

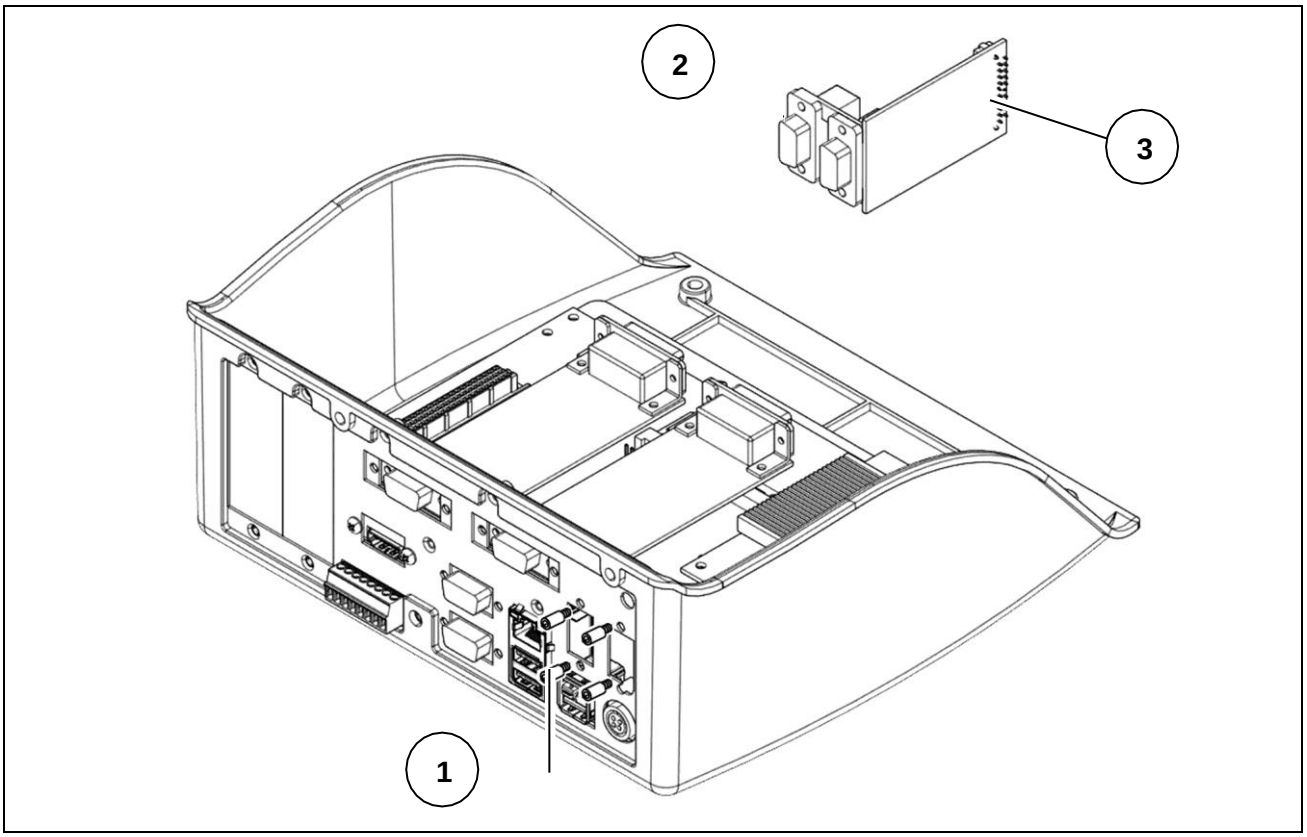

Figure 10.11-1 – Disassembling serial expansion card

Referring to the previous figure, proceed as follows:

- Open the indicator.
- Unscrew the stud bolts (ref. 1) fastening the serial expansion card (ref. 2).
- Disconnect the connector (ref. 3) from its equivalent on the motherboard and remove the card.

10.11.2 Stainless steel version with connectors

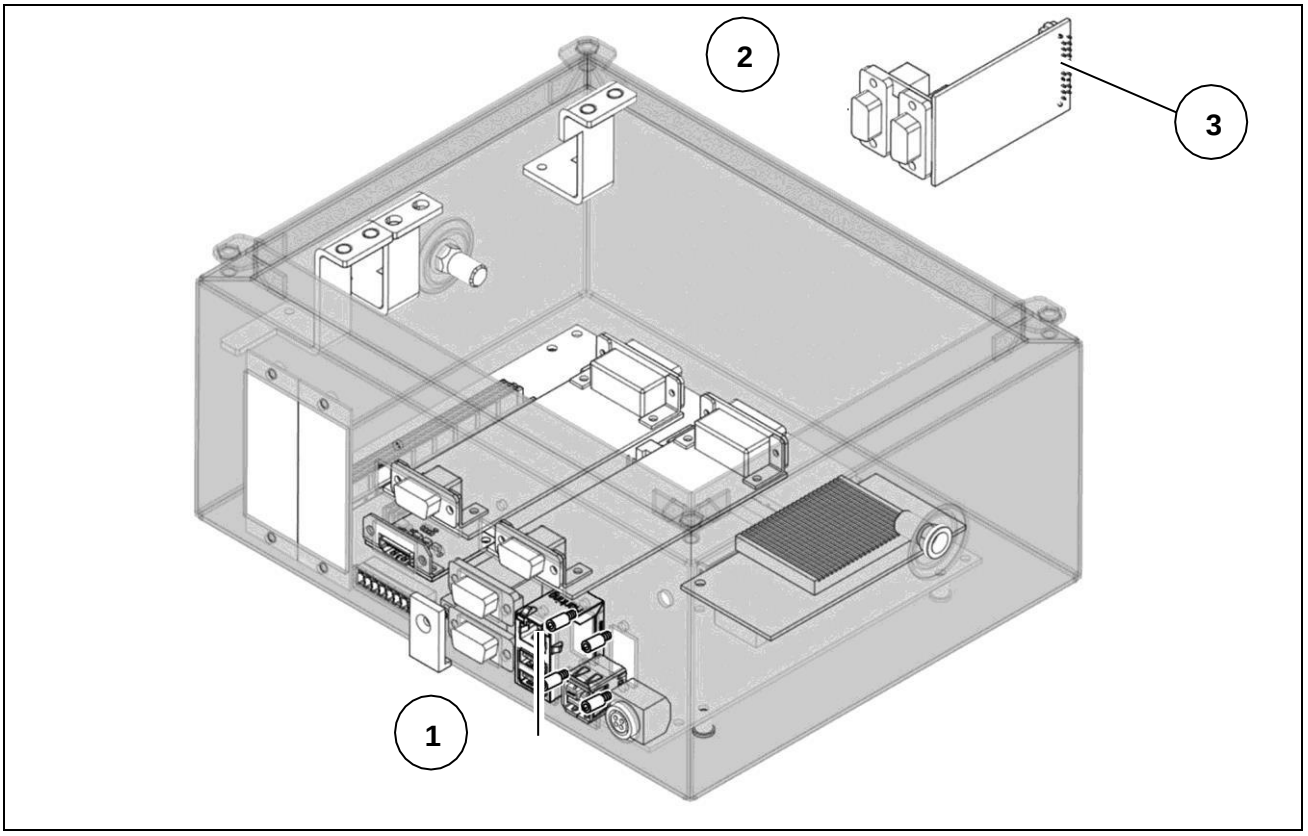

Figure 10.11-2 – Disassembling serial expansion card

Referring to the previous figure, proceed as follows:

- Open the indicator.
- Unscrew the stud bolts (ref. 1) fastening the serial expansion card (ref. 2).
- Disconnect the connector (ref. 3) from its equivalent on the motherboard and remove the card.

10.11.3 Stainless steel version with cable glands

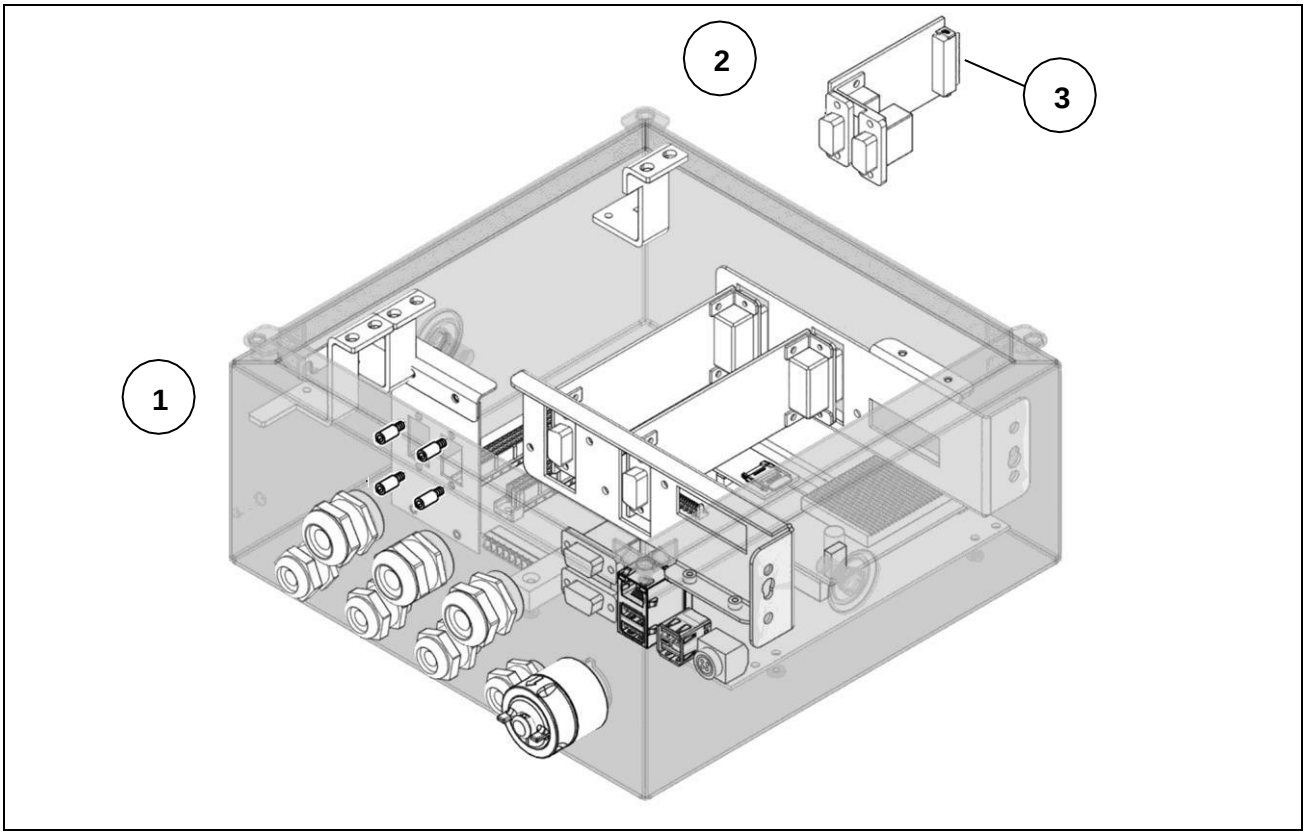

Figure 10.11-3 – Disassembling serial expansion card

Referring to the previous figure, proceed as follows:

- Open the indicator.
- Unscrew the stud bolts (ref. 1) fastening the serial expansion card (ref. 2).
- Disconnect the connector (ref. 3) from its equivalent on the motherboard and remove the card.

10.12 HDMI Assembly / disassembly

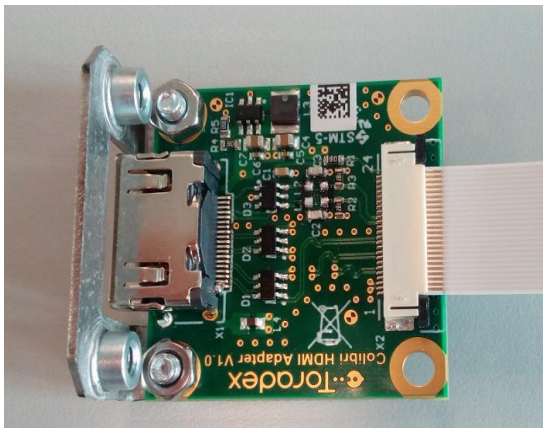



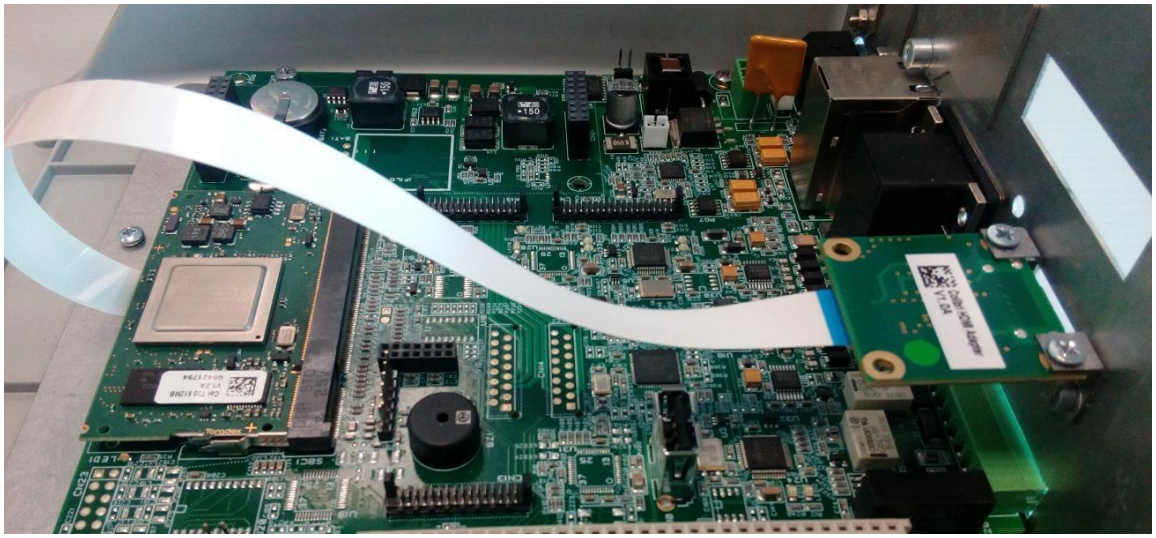

10.12.1 Plastic version

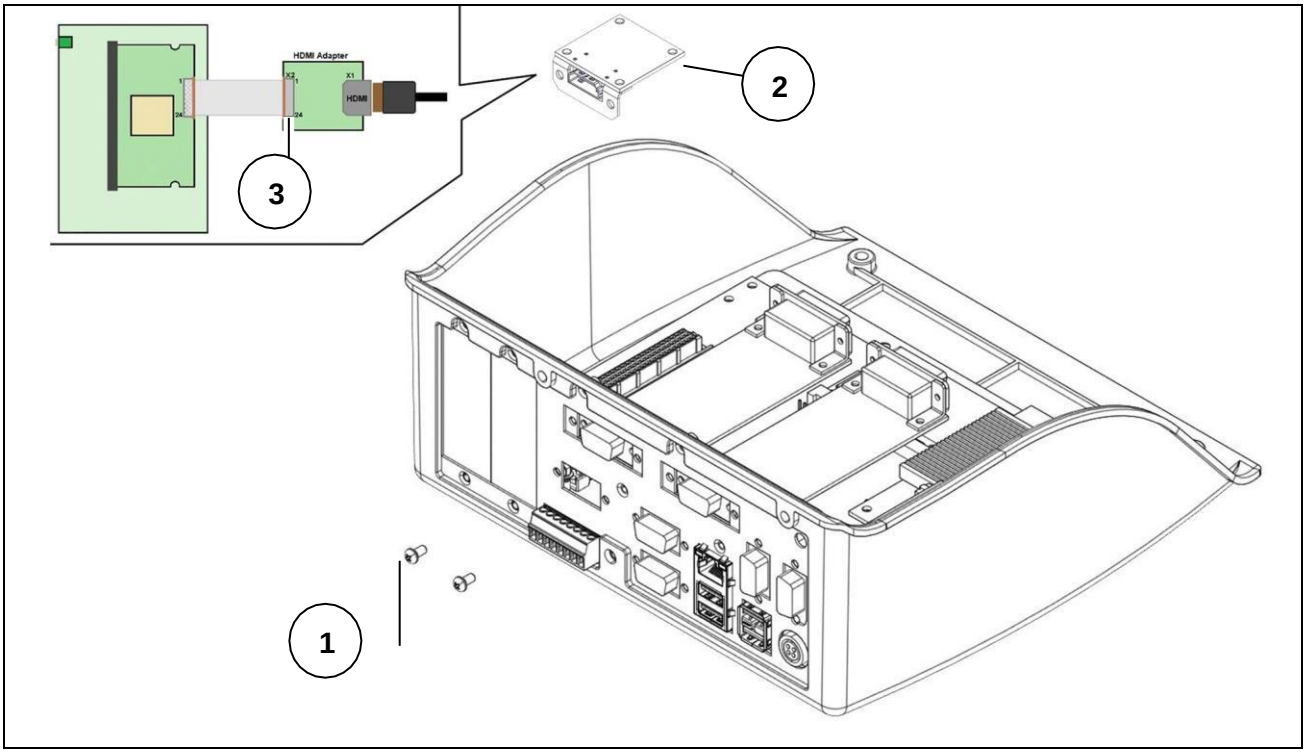

Figure 10.12-1 - Disassembling HDMI port

Referring to the previous figure, proceed as follows:

- Open the indicator.
- Unscrew the screws (ref. 1) fastening the HDMI expansion card (ref. 2).
- Disconnect the connector (ref. 3) from its equivalent on the motherboard and remove the card.

10.12.2 Stainless steel version with connectors

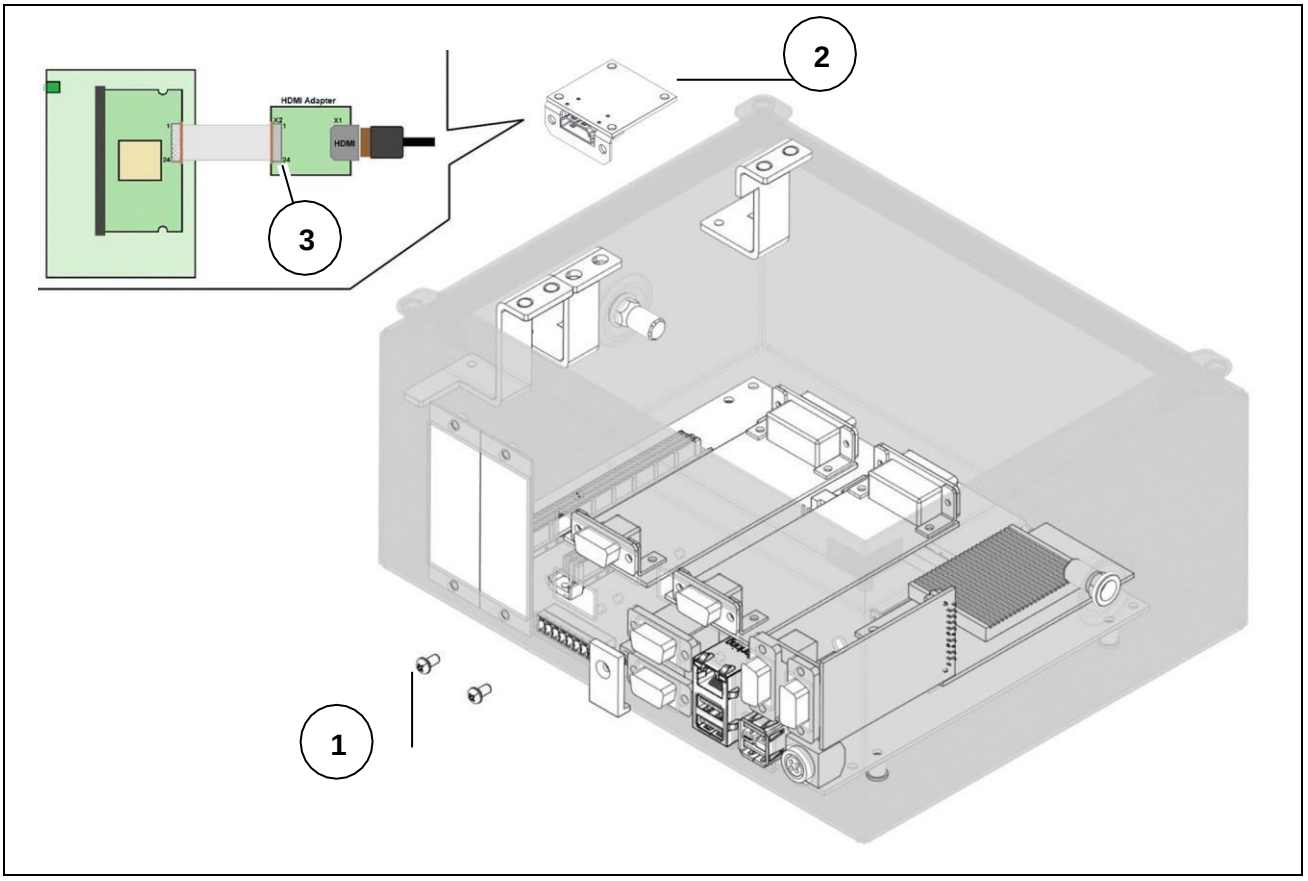

Figure 10.12-2 - Disassembling HDMI port

Referring to the previous figure, proceed as follows:

- Open the indicator.
- Unscrew the screws (ref. 1) fastening the HDMI expansion card (ref. 2).
- Disconnect the connector (ref. 3) from its equivalent on the motherboard and remove the card.

10.13 Disassembling motherboard

10.13.1 Plastic version

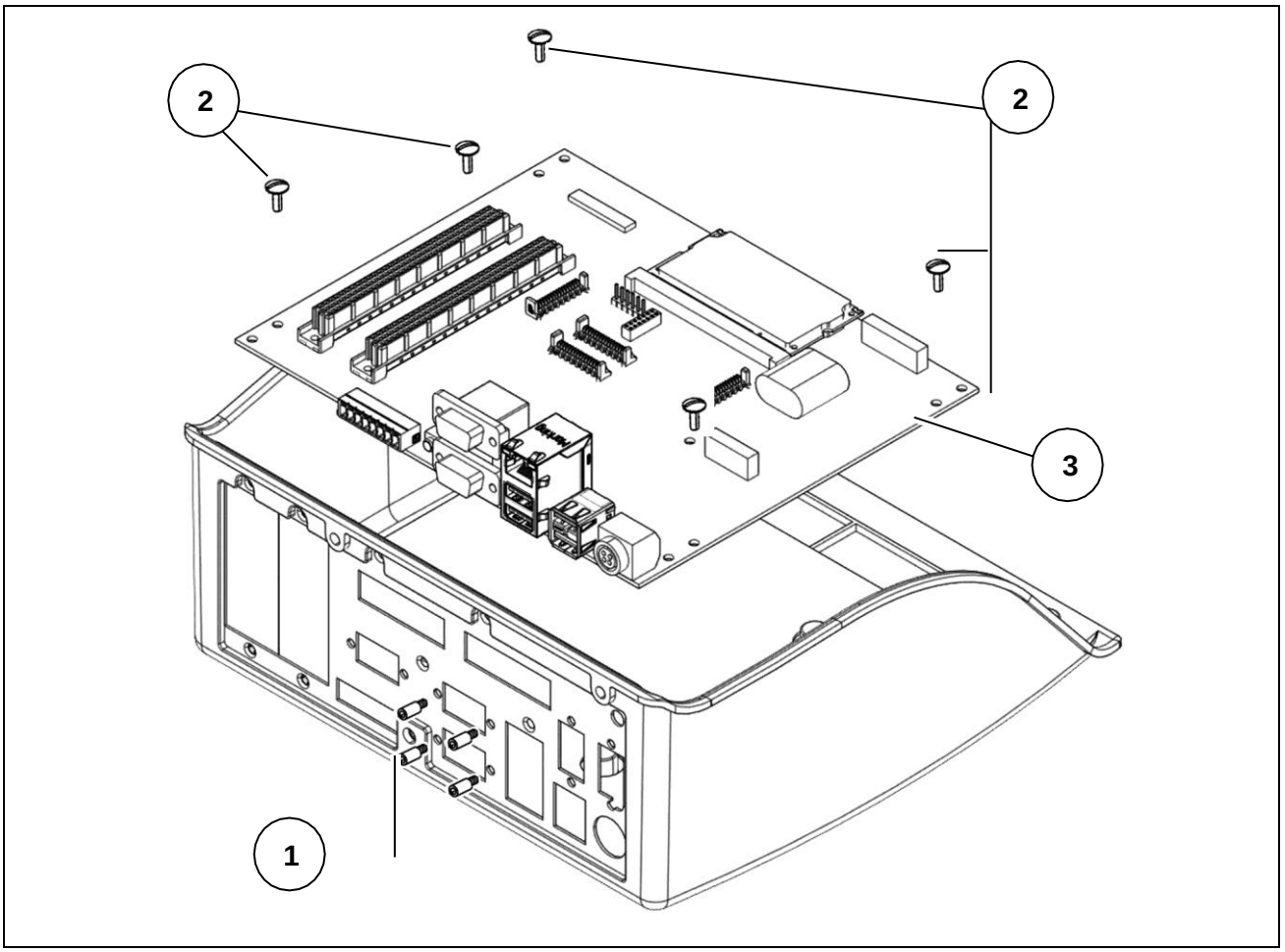

Figure 10.14-1 - Disassembling motherboard

Referring to the previous figure, proceed as follows:

- Disconnect the indicator from all the utilities.
- Open the indicator.
- Remove the digital scale power supply unit (if any)
- Remove the lithium battery
- Remove the core card
- Remove the analogue/digital scale input
- Remove the serial card expansion
- Remove the HDMI port
- Unscrew the stud bolts (ref. 1) fastening the serial cards.
- Unscrew the screws (ref. 2) and remove the motherboard (ref. 3).

10.13.2 Stainless steel version with connectors

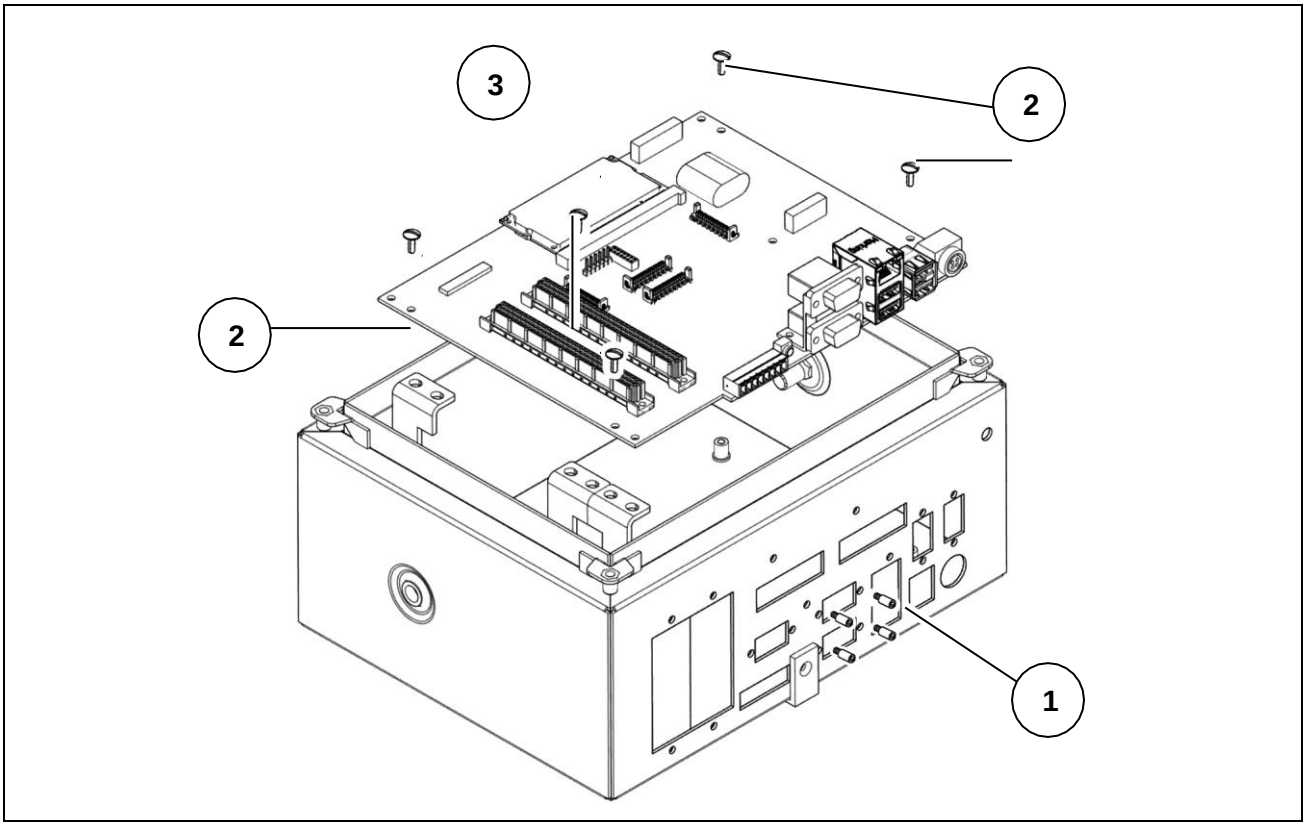

Figure 10.14-2 - Disassembling motherboard

Referring to the previous figure, proceed as follows:

- Disconnect the indicator from all the utilities.
- Open the indicator.
- Remove the digital scale power supply unit (if any)
- Remove the lithium battery
- Remove the core card
- Remove the analogue/digital scale input
- Remove the serial card expansion
- Remove the HDMI port
- Unscrew the stud bolts (ref. 1) fastening the serial cards.
- Unscrew the screws (ref. 2) and remove the motherboard (ref. 3).

10.13.3 Stainless steel version with cable glands

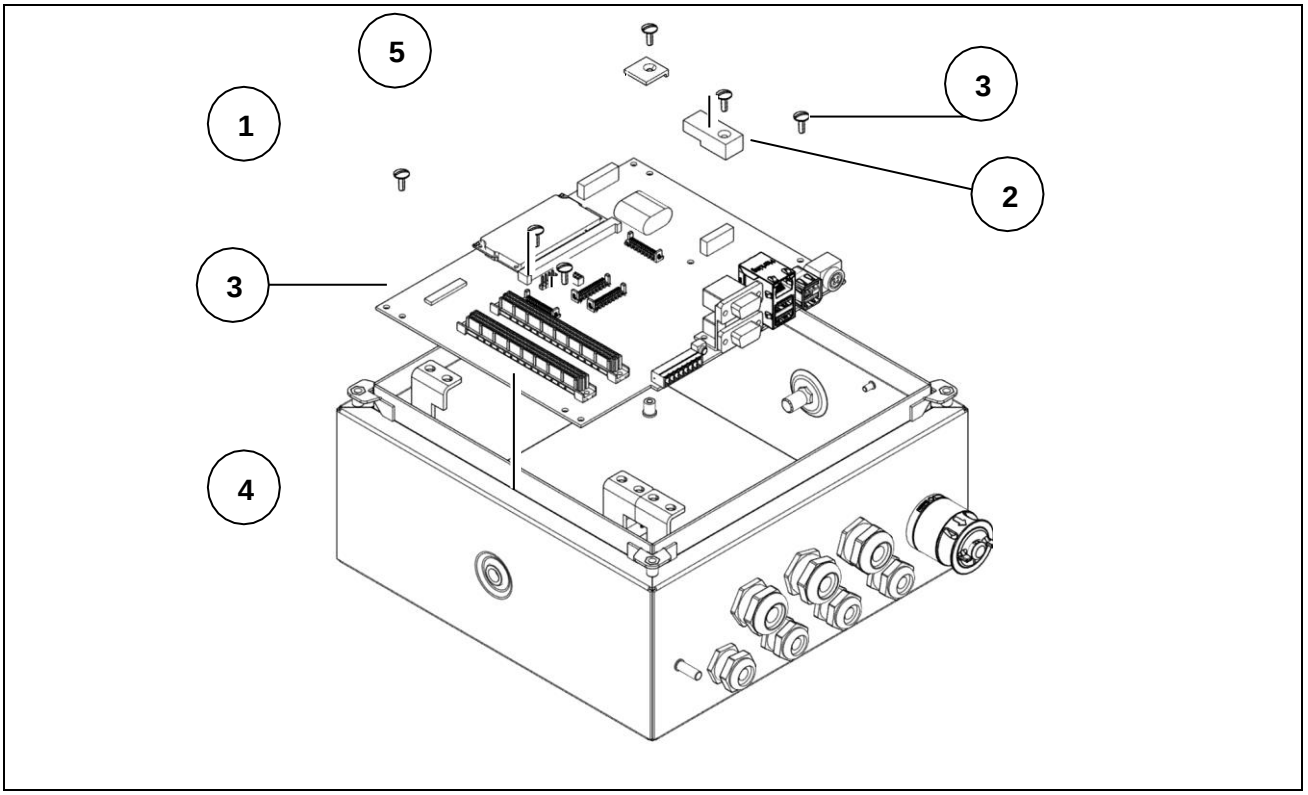

Figure 10.14-3 - Disassembling motherboard

Referring to the previous figure, proceed as follows:

- Disconnect the indicator from all the utilities.
- Open the indicator.
- Remove the weighing cell assembly and indicator power supply unit
- Remove the digital scale power supply unit (if any)
- Remove the lithium battery
- Remove the core card
- Remove the serial card expansion
- Unscrew the screw (ref. 1) and remove the protection (ref. 2) on the calibration button.
- Unscrew the screws (ref. 3) and remove the motherboard (ref. 4) and the protection plate (ref. 5).

10.14 Connecting peripheral devices to serial and USB ports

Follow the technical and documentary instructions supplied with the peripheral devices.

Società Cooperativa Bilanciai Campogalliano - 41011 Campogalliano (MO) Italy
Via S. Ferrari, 16 - Tel. +39 (0)59 893 611 - Fax +39 (0)59 527 079
Web: http://www.coopbilanciai.it - E-mail:cb@coopbilanciai.it
Customer Assistance Service Tel. +39 (0)59 893 612 - Fax +39 (0)59 527 294

Servizio post vendita	*After sales service*	*Service après-vente*
Kundendienstservice	*Servicio post-venta*	*Serviço pós-venda*

tel. +39 (0)59 893 612 – fax +39 (0)59 527 294