T401S

Weight Indicator

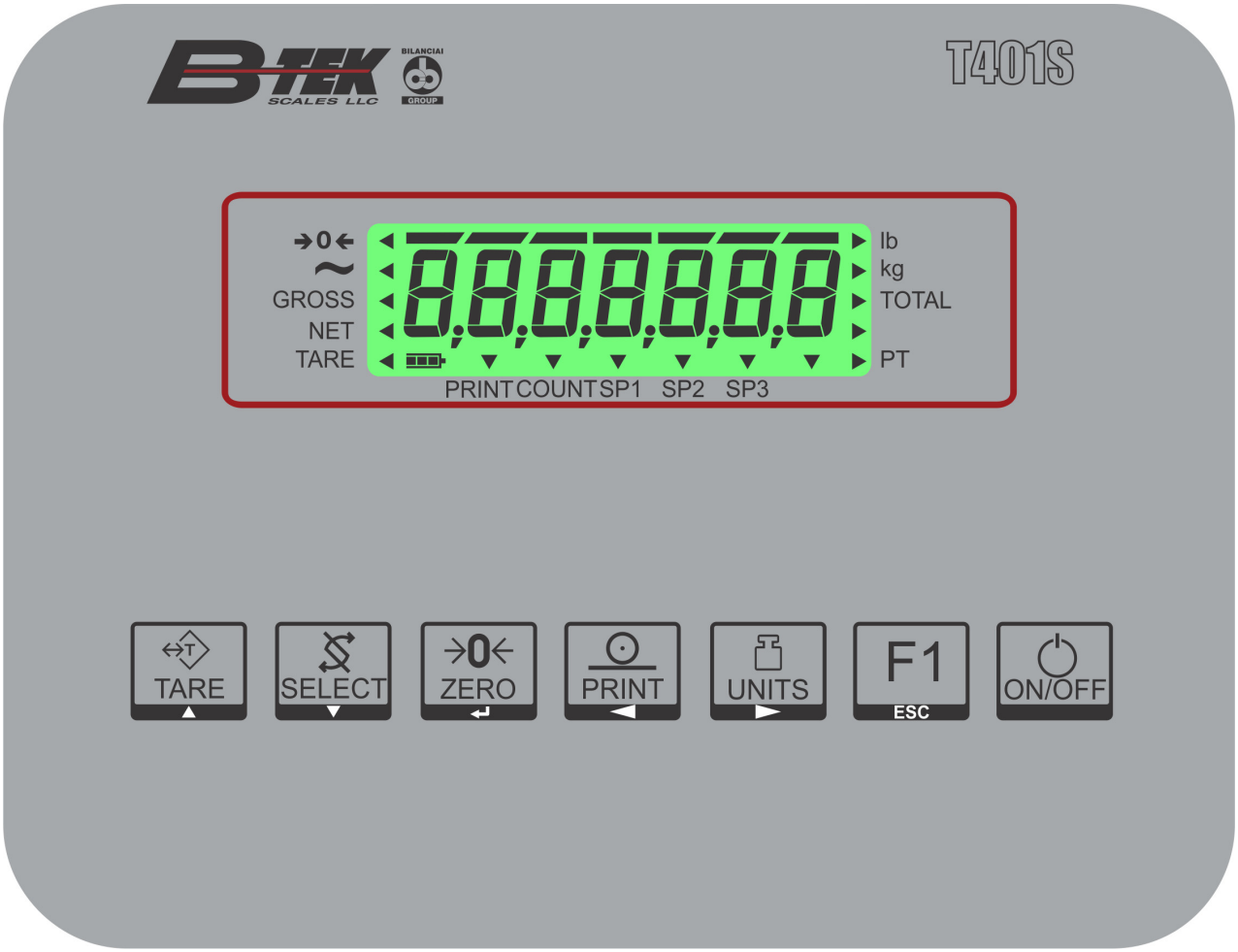

User Instructions

AWT35-501629
Issue AA

© 2016 B-TEK. All rights reserved

Table of Contents

page

Table of Contents 3

Chapter 1 General information and warnings 5
- About this manual 5
  - Text conventions 5
  - Special messages 5
- Installation 6
  - Safe handling of equipment with batteries 6
  - Wet conditions 6
- Routine maintenance 7
- Cleaning the machine 7
- Training 7
- Sharp objects 7
- FCC and EMC declarations of compliance 7

Chapter 2 Introduction 8
- Front panel 9
  - Annunciators 10
- Powering up the T401S 10
- Numeric entry procedure 11

Chapter 3 Indicator applications 12
- General weighing application 12
  - SELECT key default function 12
  - Gross weighing 12
  - Net weighing 13
  - Using setpoints 14
  - Printing 14
- General Weighing with Accumulation application 15
  - SELECT key default function 15
  - Accumulator operation 15
- Counting application 16
  - SELECT key default function 16
  - Special key functions 16
  - Sampling 16
- Checkweighing application 18
  - SELECT key default function 18
  - Special key functions 18
  - Checkweigh operation 18
  - Weighing a target object 19
  - Setting upper and lower limits 19
  - Setpoint operation in the checkweighing application 20
- Batching application 21
  - SELECT key default function 21
  - Special key functions 21
  - Batching operation 21
  - Ingredient filling 22
- Peak hold application 23
  - SELECT key default function 23
  - Special key functions 23
  - Peak hold operation 23
- Remote Display application 24

Chapter 4 Menus 25
Accessing the menus 25
Menu annunciators 25
Exiting the menus 26
USER level menus 26
User menu 27
Time 27
Date 28
Site ID 29
Seal 29
About menu 30
Boot 30
Firm and App 31
Serial 31
Enet 31
Dload 32
Audit menu 33
Counter 33

Chapter 5 Communications 35
Default print formats 35

Chapter 6 Error messages 37

Chapter 7 String index/character data entry 38

Chapter 8 Supervisor menu 39
General Weighing application supervisor menu 40
Setpoint 41
Battery 43
Accumulator application supervisor menu 45
Accumulator 46
Counting application supervisor menu 48
Count 48
Checkweighing application supervisor menu 51
Check 51
Batching application supervisor menu 54
Batch 54
Notes on batching 56
Peak Hold application supervisor menu 57
Peak hold 57
Remote Display application supervisor menu 59

1 General information and warnings

1.1 About this manual

This manual is divided into chapters by the chapter number and the large text at the top of a page. Subsections are labeled as shown by the 1.1 and 1.1.1 headings. The names of the chapter and the next subsection level appear at the top of alternating pages of the manual to remind you of where you are in the manual. The manual name and page numbers appear at the bottom of the pages.

1.1.1 Text conventions

Key names are shown in **bold** and reflect the case of the key being described. If a key has a dual function it may be referred to by its alternate function.

Displayed messages appear in ***bold italic*** type and reflect the case of the displayed message.

Annunciator names appear as *italic* text.

1.1.2 Special messages

Examples of special messages you will see in this manual are defined below. The signal words have specific meanings to alert you to additional information or the relative level of hazard.



CAUTION!
This is a Caution symbol.
Cautions give information about procedures that, if not observed, could result in damage to equipment or corruption to and loss of data.



NOTE: This is a Note symbol. Notes give additional and important information, hints and tips that help you to use your product.

1.2 Installation

NO USER SERVICEABLE PARTS. REFER TO QUALIFIED SERVICE PERSONNEL FOR SERVICE.

Equipment to be powered by a UL Listed I.T.E. power supply: rated 12 -36VDC and marked “LPS”, or a UL Listed power supply rated 12-36VDC and marked “Class 2.”

The Socket-Outlet shall be installed near the equipment and shall be easily accessible.

1.2.1 Safe handling of equipment with batteries

CAUTION: Danger of explosion if battery is incorrectly replaced. Replace only with the same or equivalent type recommended by the manufacturer. Dispose of used batteries according to the manufacturer’s instructions.

1.2.2 Wet conditions

Under wet conditions, the plug must be connected to the final branch circuit via an appropriate socket / receptacle designed for washdown use.

Installations within the USA should use a cover that meets NEMA 3R specifications as required by the National Electrical Code under section 410-57. This allows the unit to be plugged in with a rain tight cover fitted over the plug.

1.3 Routine maintenance

IMPORTANT: This equipment must be routinely checked for proper operation and calibration.
Application and usage will determine the frequency of calibration required for safe operation.

Always isolate the indicator from the power supply before starting any routine maintenance to avoid the possibility of electric shock.

1.4 Cleaning the machine



Table 1.1 Cleaning DOs and DON'Ts

DO	DO NOT
Wipe down the outside of standard products with a clean cloth, moistened with water and a small amount of mild detergent	Attempt to clean the inside of the machine
	Use harsh abrasives, solvents, scouring cleaners or alkaline cleaning solutions
Spray the cloth when using a proprietary cleaning fluid	Spray any liquid directly on to the display windows

1.5 Training

Do not attempt to operate or complete any procedure on a machine unless you have received the appropriate training or read the instruction books.

To avoid the risk of RSI (Repetitive Strain Injury), place the machine on a surface which is ergonomically satisfactory to the user. Take frequent breaks during prolonged usage.

1.6 Sharp objects

Do not use sharp objects such as screwdrivers or long fingernails to operate the keys.

1.7 FCC and EMC declarations of compliance

United States

This equipment has been tested and found to comply with the limits for a Class A digital device, pursuant to Part 15 of the FCC Rules. These limits are designed to provide reasonable protection against harmful interference when the equipment is operated in a commercial environment. This equipment generates, uses, and can radiate radio frequency energy and, if not installed and used in accordance with the instruction manual, may cause harmful interference to radio communications. Operation of this equipment in a residential area is likely to cause harmful interference in which case the user will be required to correct the interference at his own expense.

2 Introduction

The T401S indicator, shown in Figure 2.1, is easy to use for weighing. The T401S has two serial COM ports and an Ethernet port.

The indicator also has three logic level inputs with configurable functions and three setpoint outputs. See the Specification literature for a full list of specifications.

T401S
Stainless Steel

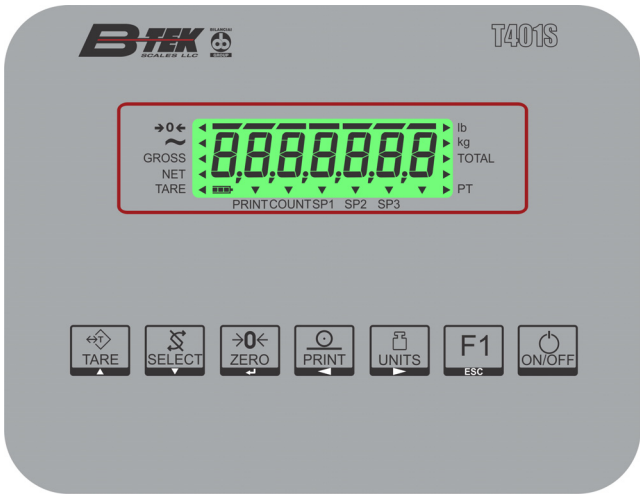

Figure 2.1 Front panel of the T401S indicator

2.1 Front panel

The front panel, shown in Figure 2.1, consists of the keys and display.



Never press a key with anything but your finger. Damage to the overlay may result if sharp or rough objects are used.

The normal function of the keys on the front panel are listed below. Some keys will have special functions in certain applications. Details are provided in the individual application sections.

TARE	Press the **TARE** key to perform a tare function. Press and hold the **TARE** key to clear a tare value. Acts as an up arrow key for menu navigation. Allows you to access minus and comma signs.
SELECT	Press the **SELECT** key to toggle between the active display values. Press and hold to enter the setpoint editor in all applications. Acts as a down arrow key for menu navigation. Allows you to access minus and comma signs.
PRINT	Press the **PRINT** to send information to a peripheral device through a configured communications port. Performs accumulator function, if enabled. Acts as a left arrow key for menu navigation.
UNITS	Press the **UNITS** key to scroll through the available units of measure while in normal operating mode. Acts as a right arrow key for menu navigation.
ZERO	Press the **ZERO** key to zero the display. Acts as an ENTER key to accept a displayed value or function.
F1	Press the **F1** key to select application specific choices. Aborts a numeric entry and acts as an ESCAPE key in the menu navigation. Also used to display or enter an accumulator channel. Press and hold to view the password entry screen for menu access.
ON/OFF	If DC powered, press to turn the indicator on. Press and hold for two seconds to turn the indicator off. If AC powered, when power is applied to the indicator it will be on.

2.1.1 Annunciators

The annunciators on the display are shown and labeled in Figure 2.2.

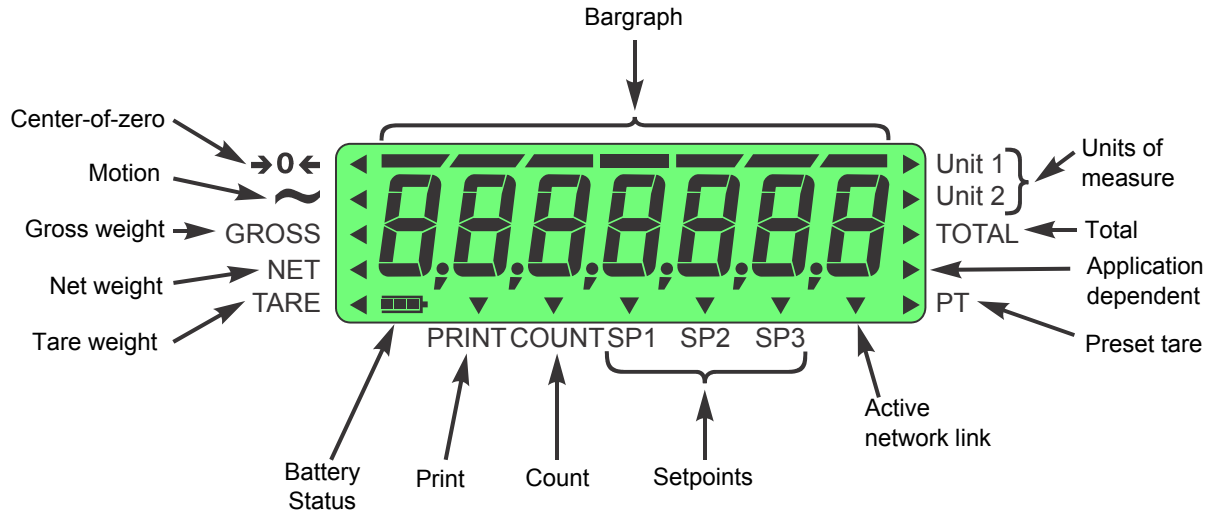

Figure 2.2 Annunciators

The triangular annunciators will light during operation to inform the user of the weighing mode, active unit of measure, etc.



The unit of measure annunciators are labeled lb and kg but if different units are chosen for Unit 1 and Unit 2 during configuration, a label should be applied over lb and kg to show the correct units.

2.2 Powering up the T401S

The indicator can be powered by AC or DC power. If AC powered, the indicator is always ON as long as power is received. If DC powered, the ON/OFF key functions as described in the section *Front panel* *on page 9*.

T401S power can be supplied by:

- AC power cord connected to a properly grounded outlet (100 VAC - 240 VAC, 50 or 60 Hz)
- Optional rechargeable battery pack
- DC power (12 to 36 VDC)

2.3 Numeric entry procedure

The keys in Figure 2.3 have alternate functions in numeric entry screens.

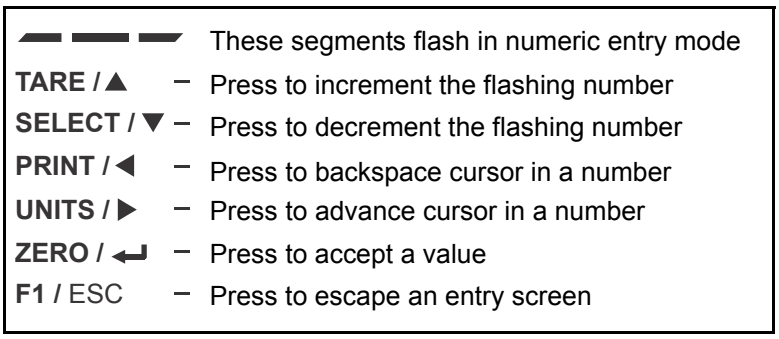

Figure 2.3 Key function during numeric entry

In numeric entry screens, the center segments shown in Figure 2.3 flash. Use the keys, as described in Figure 2.3, to enter a value on the display. Following is an example:

Example: To key in the number 507:

Repeatedly press the **TARE(↑)** or **SELECT(↓)** key until ***5*** appears on the display.

Press the **UNITS(→)** key once to move cursor one space to the right.

Repeatedly press the **TARE(↑)** or **SELECT(↓)** key until ***0*** appears on the display.

Press the **UNITS(→)** key once to move cursor one space to the right.

Repeatedly press the **TARE(↑)** or **SELECT(↓)** key until ***7*** appears on the display.

Press the **ZERO** key to enter or accept the value.

Press the **PRINT(←)** key to move the entry function one digit to the left. This effectively deletes the current value in that position and allows you to enter a new value in that position.

3 Indicator applications

This indicator has several weighing applications that can be enabled through a password protected menu. Only one application can be enabled at a time. The applications available are:

- **General Weighing** (explained on page 12)
- **Weighing with Accumulation** (explained on page 15)
- **Parts Counting** (explained on page 16)
- **Checkweighing** (explained on page 18)
- **Batching** (explained on page 21)
- **Peak Hold** (explained on page 23)
- **Remote Display** (explained on page 24)

The indicator comes with the default application called General Weighing active.

To display active application name

You can display the active application name by doing one of the following:

- Press and hold **F1** until the numeric entry screen appears. Press **F1** again to display the current application name.

Or

- Cycle power and the current app. name is displayed briefly on power up.

3.1 General weighing application

This section applies if the General Weighing application is active. Features described here also apply to the other applications except where noted in those application instructions.

3.1.1 SELECT key default function

In the General Weighing application you can view the gross, net and tare display values by repeatedly pressing **SELECT**.

3.1.2 Gross weighing



To change unit of measure, press **UNITS**.

To perform gross weighing, power up the unit and follow these steps:

1. Empty the scale and press **ZERO** to zero the display …

   0 is displayed and the *center-of-zero* annunciator (→0←) lights.

2. Place item to be weighed on the scale …

   Weight is displayed.

3. Repeat steps 1 and 2.

3.1.3 Net weighing

Net weighing is available via two types of tare entry:

Pushbutton tare When enabled press **TARE** to tare the weight on the scale.

Entered tare When enabled scroll in a tare value.

There is an auto tare clear feature. If this is enabled, after a weighment, when the weight falls into the gross zero band, tare is cleared to zero.



Definition: Gross zero band - this is a configured value that defines a window around gross zero. This is used in several ways in different applications.

Using Pushbutton Tare

To perform a net weighment using pushbutton tare, power up the unit and follow these steps:

1. With no weight on the scale, if the display does not read ***0*** press **ZERO** …

   0 is displayed and the *center-of-zero* annunciator lights.

2. Place item to be tared on the scale …

   Weight is displayed.

3. Press **TARE** …

   0 is displayed and the *NET* annunciator lights.

4. Place material to be weighed into or on the tared item on the scale …

   Net weight of material is displayed.

5. Repeatedly press **SELECT** to view the gross, tare, and net values.

6. If repeated weighments use the same tared item, you do not need to establish a new tare value as described in step 2 and 3.

Using Scroll Tare

If enabled you can scroll in a tare value using the following procedure.

1. Press the **SELECT** key repeatedly until the tare value is displayed. This is indicated by the *TARE* annunciator.

2. Press the **TARE** key and scroll in the tare value using the *Numeric entry procedure on page 11*. Be sure to press the **ZERO** key to accept the value.

3. The new tare value is now active.

To Clear a Tare

Use one of these methods to clear a tare:

- Press and hold the **TARE** key. The display will change to gross mode.
- If gross weight is not at 0, press the **ZERO** key; then press the **TARE** key to clear the tare value.

3.1.4 Using setpoints

Setpoints are values (weight) at which outputs are triggered automatically. Outputs can control relays connected to valves, lights, other machinery, etc. See the *Supervisor menu on page 39* for information on how to edit or enter setpoint values.

See the note below for an overview of how setpoints function.



By default all setpoints are disabled. If activated, they behave differently in the different applications. See the table below:

	Below Value	Above Value
General App.	***ON***	***OFF***
Accumulator App.	***ON***	***OFF***
Count App.	***ON***	***OFF***
Checkweigher App.	***SP1 - UNDER***	
	SP2 - ACCEPT	
	SP3 - OVER	
Batching App.	***ON***	***OFF***
Peak Hold App.	***ON***	***OFF***
Remote Display App.	***OFF***	***ON***

3.1.5 Printing

To print the current weight information, press **PRINT**. The configured print format will be output through the configured port to the connected peripheral device. The indicator can be configured to only allow one print for each weighing sequence. If **PRINT** is pressed when so configured, the message ***cAnt*** will appear.

Refer to *Default print formats on page 35*.

3.2 General Weighing with Accumulation application

This section applies if the Accumulator application is active.

3.2.1 SELECT key default function

In the Accumulator application you can view the Gross, Net, Tare, Gross Total, Net Total and Transaction Count display values by repeatedly pressing **SELECT**.

When the Gross Total is displayed, both the *GROSS* and *TOTAL* annunciators will be lit. When the Net Total is displayed, both the *NET* and *TOTAL* annunciators will be lit. When the Transaction Count is displayed, the *TOTAL* annunciator is lit.

3.2.2 Accumulator operation

The accumulator application can be used to record totals of individual weighments.

Follow these steps:

1. Press **ZERO** to zero the scale, if necessary …

   0 is displayed.

2. Place item on the scale …

   Weight is displayed.



You can use gross or net weighing with the accumulator application as it stores both gross and net totals. You have one accumulator channel that is active all the time.

*Press **SELECT** to toggle through the current values. When annunciators TOTAL & GROSS are lit this indicates the total for the gross value. When annunciators TOTAL & NET are lit this indicates the total for the net value. When annunciators TOTAL & TARE are lit this indicates the total for the tare value. When TOTAL only is lit this is the current number of transactions.*

3. Press **PRINT** to add weight to the accumulator and to print the selected print format …

   The *PRINT* annunciator lights briefly.



*You can press the **F1** key to add the weight to the accumulator without performing the print function.*

4. Remove weight from the scale. Weight must return to inside the gross zero band before another print and accumulation can be recorded.
5. Repeat steps 2 through 4 for each weighment you want to accumulate.

If enabled, press and hold **PRINT** for three seconds to print and/or clear the active accumulator values. These functions are enabled or disabled in a password protected menu.

3.3 Counting application

This section applies if Counting is active.

3.3.1 SELECT key default function

In the Counting application you can view the gross, net, tare, count, count total, transaction total and piece weight display values by repeatedly pressing **SELECT**.

3.3.2 Special key functions

The following keys have an extra function in this application:

F1 Press **F1** to perform the sample operation as described below in the Sampling section.

PRINT Press the **PRINT** key to perform the print function and to add the count to the accumulator.

Press and hold the **PRINT** key to print the total print format chosen in the password protected Supervisor menu.

3.3.3 Sampling

To sample parts follow these steps:

1. Press **ZERO** to zero the scale, if necessary.
2. Use a tare method to tare a container, if necessary. See *Net weighing on page 13*.
3. Press **F1** …

   ZEroing is briefly displayed. This means the indicator is zeroing itself. A numeric value (***XX***) is then displayed. This is the current sample size.

4a. Accept the current sample size by pressing **ZERO**

OR

4b. Use the *Numeric entry procedure on page 11* to enter a new sample size and press **ZERO** …

   Add is displayed. Count the number of sample items onto the scale and when ready press **F1** …

   buSY is briefly displayed, followed by one of two possible outcomes:

   a. If the sample met the minimum sample requirements and the weight is stable, the display will show the correct number of parts on the scale and *COUNT* is lit.

b If the sample size was not large enough or if the weight was unstable, ***Abort*** is briefly displayed and the display returns to gross weighing mode. Repeat steps 3 through 5 using a larger sample size.



Minimum sample weight is the gross zero band value. The initial sample count is 5 pieces. The maximum number of pieces that can be sampled is 100,000.

5. Place the parts on the scale to be counted. To accumulate the count and number of transactions, press **PRINT** while in count mode.
6. If enabled, press and hold **PRINT** for three seconds to print and/or clear the active count total. These functions are enabled or disabled in a password protected menu.

3.4 Checkweighing application

This section applies if your indicator has the Checkweighing application enabled.

3.4.1 SELECT key default function

In the Checkweighing application you can view the gross, net and tare display values by repeatedly pressing **SELECT**.

3.4.2 Special key functions

The following keys have an extra function in this application:

F1 Press **F1** to set the target weight or upper and lower limits, as described below.

3.4.3 Checkweigh operation

Checkweighing allows a quick, visual check of the acceptability or unacceptability of an item's weight. Figure 3.1 shows the checkweighing bargraph at the top of the display.

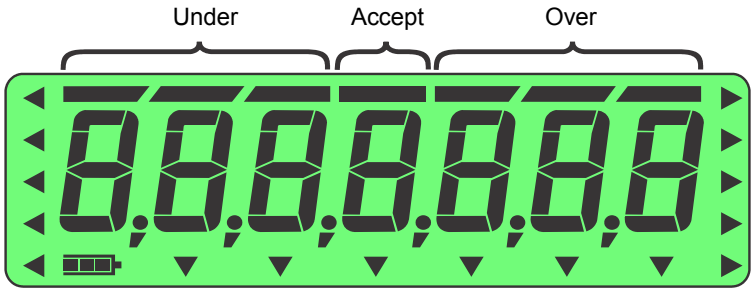

Figure 3.1 Checkweighing bargraph

There are two ways to set a target weight:

- **Weigh the target object** - If you use this method the acceptable weight will be the actual weight of the target sample ± a predefined range (default is ±1 division).
- **Key in upper and lower weight limits** - If you use this method the acceptable weight is any weight which falls between the upper and lower limits.

Each of these is explained below.



The checkweighing annunciators are based off of net weight so if a tare is active only the net weight is considered for checkweighing. If there is no tare, gross weight is used as the basis for the annunciators.

3.4.4 Weighing a target object

With the indicator in checkweighing mode, follow these steps to set a target by weighing an object.

1. Press **ZERO** to zero the scale, if necessary.
2. Enter a tare if necessary. Refer to *Net weighing on page 13* for instructions.
3. Place an object of the desired weight on the scale and press **F1** …

   The weight is displayed and the middle bargraph segment lights as well as the *SP2* annunciator.



*The acceptable target window is a range from **Target Object weight ± a predefined range** entered in a password protected menu.*

The farther the weight is from the target weight, more over or under bargraph segments will light. The UNDER and OVER bargraph segments are fixed at 1 division each.

4. Remove the object and replace with the next object to be checked.

   The bargraph will show if the weight is under, over or within the target weight range. If the weight is under, *SP1* annunciator and the *UNDER* bar segments will light. If the weight is over, *SP3* annunciator and the *OVER* bar segments will light.
5. Repeat step 4 until you are finished weighing items.

The current target weight will be active until you repeat steps 1 through 3 with a new item of a different weight.

3.4.5 Setting upper and lower limits

With the indicator in checkweighing mode, follow these steps to set a target by setting upper and lower limits.

1. Press **ZERO** to zero the scale, if necessary.
2. Enter a tare if necessary. Refer to *Net weighing on page 13* for instructions.
3. With weight inside the gross zero band, press **F1** …

   Lo will be displayed briefly and then the current value for the lower accept weight.
4. Press **ZERO** to accept this or key in a new lower accept weight and press **ZERO** …

   Hi is briefly displayed and then the current value for the upper accept weight.
5. Press **ZERO** to accept this or key in a new upper accept weight and press **ZERO** …

   The display returns to normal weighing mode.

6. Place a weight on the scale …

   If the weight is below the lower accept weight, the left bargraph segments will light.

   Any weight between the lower and upper acceptable weights will cause the middle bargraph segment to light to show the weight is within the target range.

   If the weight is above the upper acceptable weight, the right bargraph segments will light.

7. Remove the item from the scale and repeat step 6 to check other items.

8. To set new upper and lower limits, repeat steps 1 through 5.

3.4.6 Setpoint operation in the checkweighing application

Inside the Gross Zero Band = All outputs and annunciators are off.

Under Target or Below Low Accept Weight = *SP1* annunciator and Output 1 are on.

Inside Target = *SP2* annunciator and Output 2 are on.

Over Target or Above Upper Accept Weight = *SP3* annunciator and Output 3 are on.



Outputs have to be enabled (see Service manual).

3.5 Batching application

This section applies if your indicator has the Batching application active.

3.5.1 SELECT key default function

In the Batching application you can view the gross, net and tare display values by repeatedly pressing **SELECT**.

3.5.2 Special key functions

The following keys have an extra function in this application:

F1 **F1** acts as a **START**, **STOP**, **RESTART** key on successive presses.

SELECT Press and hold to access the setpoint editor. Below is the Setpoint editor menu:

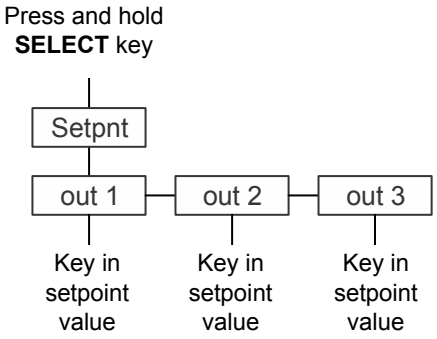

3.5.3 Batching operation

Batching allows the indicator to control up to three motors, timers, augers, gates, etc. using the three outputs for the purpose of making batches based on weight.

There is one type of batching operation, ingredient filling (up to three ingredients).

Other parameters, that are set in a password protected menu, affect the batching operation.



The bargraph will sequentially light up to show from 0 to 100% of the batch weight.

3.5.4 Ingredient filling

Ingredient filling is for batching up to 3 different ingredients controlled by Out 1, 2 and 3 values. If Out 2 value is 0 then it operates as a single ingredient filler. If Out 3 value is 0 then it operates as 2 ingredient batcher.

1. Press and hold **SELECT** to access the setpoint editor.
2. Set ***Out 1*** to the ingredient 1 value, ***Out 2*** to the ingredient 2 value and ***Out 3*** to the ingredient 3 value.
3. To start the batching process, press **F1**. See more details on Gross or Net weight batching in *Notes on batching on page 56*.
4. To stop the batching process, press **F1**. When you press **F1** again, the batching process starts over from the beginning.

3.6 Peak hold application

This section applies if your indicator has the Peak Hold application active.

3.6.1 SELECT key default function

In the Peak Hold application you can view the gross peak weight display value by pressing **SELECT**.

3.6.2 Special key functions

The following key has an extra function in this application:

F1 **F1** resets the max peak weight to the current gross weight.

3.6.3 Peak hold operation

Only the highest weight applied to the scale is displayed when the peak weight value is selected to be displayed. Peak weight is designated by the annunciator shown in Figure 3.2.

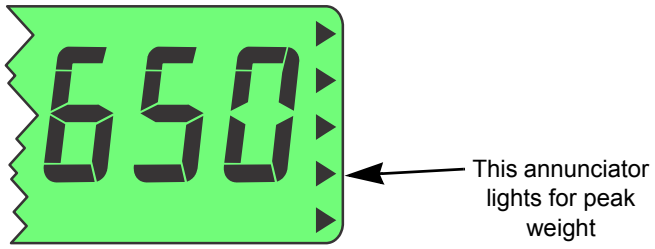

Figure 3.2 Min/Max annunciators

With the Peak application active, follow these steps to perform and view peak weighments.

1. Repeatedly press **SELECT** until the annunciator shown in Figure 3.2 lights. This means you are now viewing the peak weight.
2. With no weight on the scale, press **ZERO**, if necessary press **F1** to reset any previous peak value on the display.
3. Place weight on the scale and then remove it …

   The display will show the peak weight recorded during the weighment.
4. To reset the peak, press **F1** …

   The peak weight is reset to the **current gross weight**.
5. Repeat the steps to perform another peak weighment.

3.7 Remote Display application

This section applies if you have the Remote Display application active.

The indicator can be configured to work as a remote display with other compatible indicators.

To use the indicator as a Remote display for a Primary indicator you must configure settings in the Supervisor menu and in a separate password protected menu.

A remote indicator will display the same information as the primary indicator and pressing the main function keys (Tare, Select, Zero, Print, and Units) on the remote will function as if they were pressed on the primary indicator.

Contact your local representative for information on setting up the indicator as a Remote or Primary indicator.

4 Menus

Password protected menus are available to configure the indicator and/or view information.

4.1 Accessing the menus

Follow these steps to access the menus in the T401S.

1. With the indicator powered up and in normal operating mode, press and hold **F1** …

   Pass is displayed, prompting you to enter the password.

2. Key in the password for the menu you want and press the **ZERO** key …

   The first item in the top level of the menu you accessed is displayed.

3. Use the navigation keys, shown below, to navigate through the menu structure. The symbols in the chart appear on the bottom of the keys.

Press **SELECT**/ ▼ to move down in a menu
Press **TARE**/ ▲ to move up in a menu, except at the bottom item in a menu, then use **ZERO**/ ↵ or **F1**
Press **PRINT**/ ◀ to move left in a menu
Press **UNITS**/ ▶ to move right in a menu
Press **ZERO**/ ↵ to accept a value or choice and move up in the menu.
Press **F1** to escape and move up in the menu

4.2 Menu annunciators

The menu structure is made up of menu items, parameters, value entry screens and lists from which you choose one item. To help you know where you are in the menu, the bargraph at the top of the display is on while the indicator is in the menus and will change appearance according to the following rules:

All segments flashing	This means you are in the menu structure but not in any of the following screens.
Center flashing / others solid	This means you are in a parameter prompt screen.
Center flashing / others off	This means you are in a numeric entry screen. Enter a number and press **ZERO** to accept.
Right flashing / others off	This means you are in a list. Scroll through the choices with the **PRINT** and **UNITS** keys and press **ZERO** to accept.

4.3 Exiting the menus

1. If you are at the bottom item in a menu use **ZERO** to accept a choice or value and move up a level, or use **F1** to escape and move up one level without accepting the choice or value. From that point, press **TARE** repeatedly until …

   SAVE no is displayed. This means "Do not save changes."

2. Press **UNITS** to scroll through the choices: ***SAVE no***, ***SAVEYES*** and ***CAnCEL***. Press **ZERO** to accept the displayed choice.

   If you choose ***SAVE no*** or ***SAVEYES*** the indicator exits the menu and returns to normal weighing mode.

   OR

If you choose ***CAnCEL***, the indicator remains in the menu.

4.4 USER level menus

The USER level menus are available to the user. The other menu levels are for supervisors and technicians only.

The USER level (password 111) contains the User, About, and Audit menus arranged as shown in Figure 4.1.

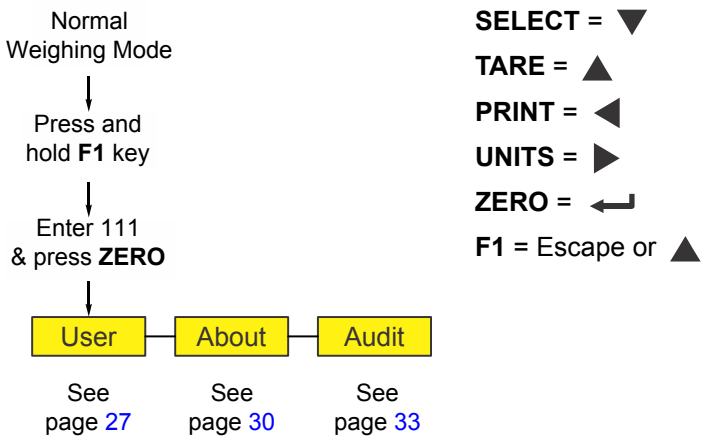

Figure 4.1 USER level (password 111) menus

4.5 User menu

The User menu is shown in Figure 4.2.

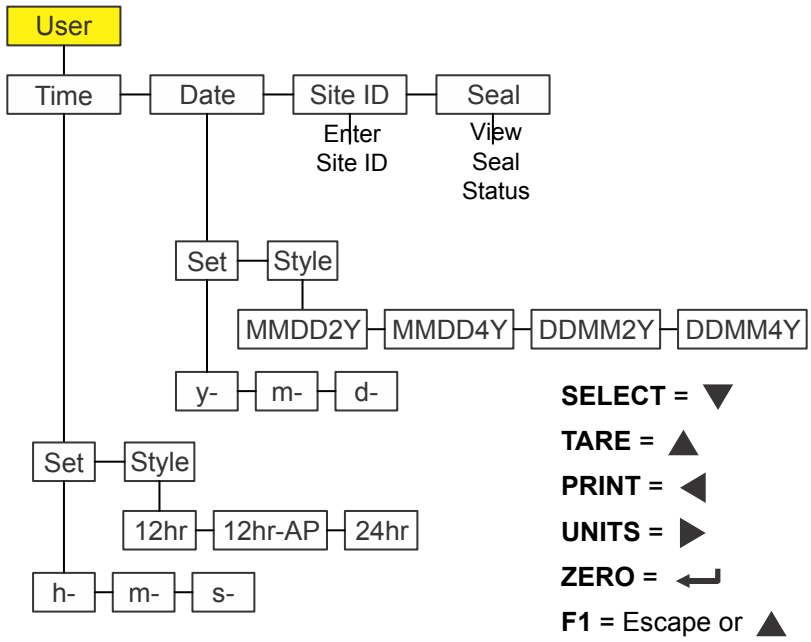

Figure 4.2 User menu

Use this menu to set the time and date, to enter a site ID, and view the physical seal status. Each is explained below. Use the *Numeric entry procedure on page 11* when you need to enter values.

4.5.1 Time

User ↓ Time



*The ↓ and → symbols used in this section stand for direction moved in the menu. So User ↓ Time, shown above, illustrates that you move down from **uSEr** to **tiME**. This will help you keep track of where you are in the menu structure.*

1. Access the User menu (see *Accessing the menus on page 25*) and press **SELECT** …

   tiME is displayed. Use this to set the time and clock style.

2. Press **SELECT** …

   SEt is displayed.

3. Press **SELECT** …

   h- ***x*** is displayed, with the ***x*** flashing. This is a numeric entry screen for the hour value.

4. Key in the hour of the day using military (24 hr) time and press ***ZERO*** to accept …

   M- x is displayed, with the ***x*** flashing. This is a numeric entry screen for the minute value.

5. Key in the minute value and press ***ZERO*** to accept …

   S- x is displayed, with the ***x*** flashing. This is a numeric entry screen for the second value.

6. Key in the seconds value and press ***ZERO*** to accept …

   SEt is displayed.

7. Press **UNITS** …

   StYLE is displayed. Use this to set the style of clock for printouts. Choices are ***12hr***, ***12hr-AP*** (AM/PM) and ***24hr*** (military time).

8. Press **SELECT** …

   The current selection is displayed.

9. Press **UNITS** to scroll through the choices. Press **ZERO** to accept the displayed choice …

   StYLE is displayed.

10. Press **TARE** …

    tiME is displayed.

4.5.2 Date

User ↓ Time → Date

1. From ***tiME***, press **UNITS** …

   dAtE is displayed.

2. Press **SELECT** …

   SEt is displayed.

3. Press **SELECT** …

   y- x is displayed, with the ***x*** flashing. This is a numeric entry screen for the year value.

4. Key in the year and press ***ZERO*** to accept …

   M- x is displayed, with the ***x*** flashing. This is a numeric entry screen for the month.

5. Key in the month value and press ***ZERO*** to accept …

   d- x is displayed, with the ***x*** flashing. This is a numeric entry screen for the day value.

6. Key in the day value and press ***ZERO*** to accept …

   SEt is displayed.

7. Press **UNITS** …

   StYLE is displayed. Use this to set the style of date for printouts. Choices are ***MMDD2Y***, ***MMDD4Y***, ***DDMM2Y*** and ***DDMM4Y***.

8. Press **SELECT** …

   The current selection is displayed.

9. Press **UNITS** to scroll through the choices. Press **ZERO** when your choice is displayed …

   The choice is made and ***StYLE*** is displayed.

10. Press **TARE** …

    dAtE is displayed.

4.5.3 Site ID

User ↓ Time → Date → Site ID

1. From ***dAtE***, press **UNITS** …

   SitE id is displayed.

2. Press **SELECT** …

   A string entry screen is displayed.

   See *String index/character data entry on page 38* for instructions on how to enter string characters.

3. Key in a site ID number and press **ZERO** to accept …

   SitE id is displayed.



The Site ID can be used in transmitted or printing information. ASCII characters 32-126 can be used.

4.5.4 Seal

User ↓ Time → Date → Site ID → Seal

1. From ***SitE id***, press **UNITS** …

   SEAL is displayed.

2. Press **SELECT** …

   unSEALE or ***SEALEd*** is displayed. This is the status of the physical seal inside the indicator. If the unit is sealed, no changes can be made to the configuration of the indicator.

3. Press **F1** to return to the ***SEAL*** display.

4. To exit the menu, see *Exiting the menus on page 26*.

4.6 About menu

The About menu is shown in Figure 4.3.

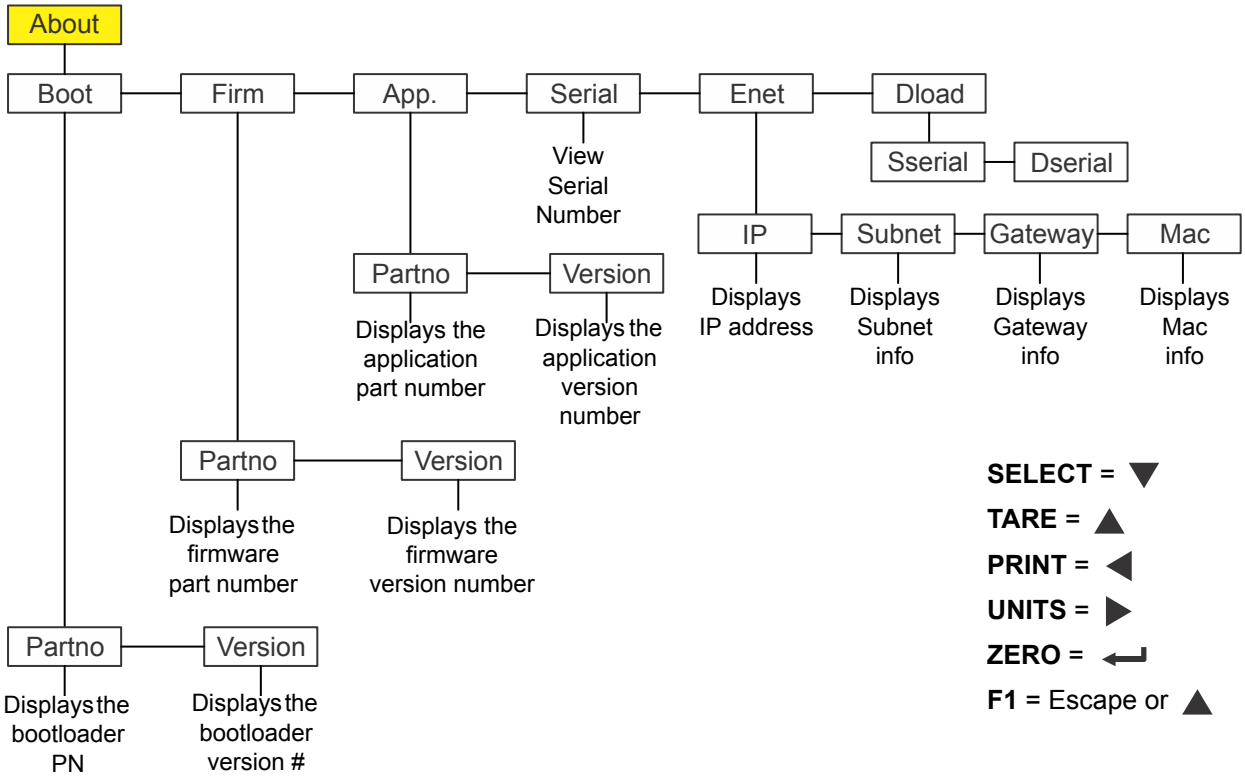

Figure 4.3 About menu

Use this menu to display information about the various items shown in Figure 4.3. Each is explained below. Use the *Numeric entry procedure on page 11* when you need to enter values.

4.6.1 Boot

About ↓ Boot

1. Access the About menu and press **SELECT** …

   boot is displayed.

2. Press **SELECT** …

   PArtno is displayed

3. Press **SELECT** …

   The 1st half of the bootloader PN is displayed. Press **UNITS** to view the 2nd half.

4. Press **ZERO** to return to the ***PArtno*** display.

5. Press **UNITS** …

   VErSion is displayed.

6. Press **SELECT** …

   The version number of the bootloader is displayed.

7. Press **ZERO** to return to the ***VErSion*** display.

8. Press **TARE** to return to the ***boot*** display.

4.6.2 Firm and App

About ↓ Boot → Firm and App

1. From ***boot***, press **UNITS** …

   FirM is displayed. This stands for firmware.

2. Repeat the same pattern of key presses in steps 2 through 7 to view the part number and version for the ***FirM***. and ***APP*** menu items.

4.6.3 Serial

About ↓ Boot → Firm → App → Serial

1. With ***APP*** displayed, press **UNITS** …

   SEriAL is displayed.

2. Press **SELECT** …

   The first four digits of the indicator serial number are displayed. Press **UNITS** to view the last five digits.

3. Press **TARE** to return to the ***SEriAL*** display.

4.6.4 Enet

About ↓ Boot → Firm → App → Serial → Enet



If the indicator is connected to an ethernet network, the values displayed will be the current assigned addresses.

1. From ***oPtion***, press **UNITS** …

   EnEt is displayed. Use this item to view the values for the IP, Subnet, Gateway and MAC addresses.

2. Press **SELECT** …

   iP Addr is displayed. Use this item to view the four part IP address.

3. Press **SELECT** …

   1 XXX is displayed. This is first octet of the IP address

4. Press **ZERO** …

   2 XXX is displayed. This is second octet of the IP address.

5. Press **ZERO** …

   3 XXX is displayed. This is third octet of the IP address.

6. Press **ZERO** …

   4 XXX is displayed. This is fourth octet of the IP address.

7. Press **ZERO** …

   iP Addr is displayed.

8. Press **UNITS** …

   Subnet is displayed.

9. Repeat this sequence of key presses for the ***Subnet***, ***Gateway*** and ***MAC*** addresses.

10. When finished press **TARE** …

    EnEt is displayed.

4.6.5 Dload

About ↓ Boot → Firm → App → Serial → Enet → Dload

1. From ***EnEt***, press **UNITS** …

   dLoAd is displayed. This stands for download. Under ***SSEriAL*** you can view the serial number of the software application that created the configuration file. Under ***dSEriA***L you can view the serial number of the software application that downloaded the configuration file. This is used for security and licensing purposes.

2. Press **SELECT** …

   SSEriAL is displayed.

3. Press **SELECT** …

   The 1st half of the serial number of the creating application of the configuration file is displayed.

4. Press **ZERO** to show the 2nd half.

5. Press **F1** …

   SSEriAL is displayed.

6. Press **UNITS** …

   dSEriAL is displayed.

7. Press **SELECT** …

   The 1st half of the serial number of the downloading application of the configuration file was downloaded to, is displayed.

8. Press **ZERO** to show the 2nd half.

9. Press **F1** …

   dSEriAL is displayed.

10. Press **TARE** until ***About*** is displayed.
11. To exit the menu, see *Exiting the menus on page 26*.

4.7 Audit menu

The Audit menu is shown in Figure 4.4.

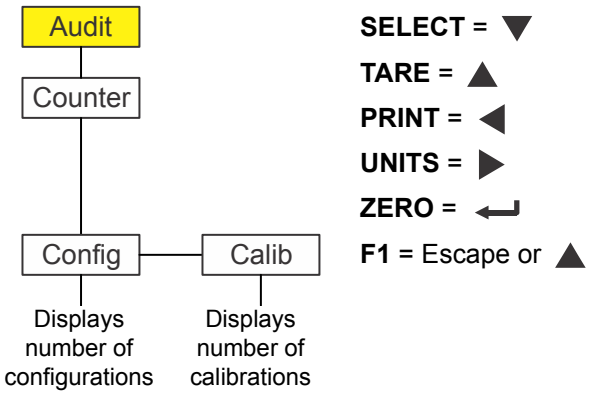

Figure 4.4 Audit menu

Use this menu to display audit counters for configuration and calibration. Each is explained below. Use the *Numeric entry procedure on page 11* when you need to enter values.

4.7.1 Counter

Audit ↓ Counter

1. Access the Audit menu and press **SELECT** …

   countEr is displayed. This has two counters that tell you how many times the indicator has been configured and calibrated.

2. Press **SELECT** …

   conFig is displayed.

3. Press **SELECT** again …

   A number appears showing how many times the indicator has been configured.

4. Press **ZERO** …

   conFig is displayed.

5. Press **UNITS** …

   cALib is displayed.

6. Press **SELECT** …

   A number appears showing how many times the indicator has been calibrated.

7. Press **ZERO** …

   cALib is displayed.

8. Press **TARE** …

   countEr is displayed.

9. This completes the Audit menu. To exit the menu, see *Exiting the menus on page 26*.

5 Communications

The T401S can communicate through these ports:

- Serial
- Ethernet

5.1 Default print formats

Below are examples of the ten default formats that are available. The default unit of measure may change based on your geography.

General Weighing (Format #1)

```
   Gross  272.04 lb
    Tare   95.88 lb
     Net  176.16 lb
```

General Weighing (Format #2)
Default for Accumlator App.

```
Transaction Count:   10
 Gross  272.04 lb
  Tare   95.88 lb
   Net  176.16 lb
```

Active Count (Format #3)
Default for Counting App.

```
 Count     176
```

Net weight only
General Weighing (Format #4)
Default for Checkweighing App.

```
 Net   176.16 lb
```

Active displayed weight value
General Weighing (Format #5)
Default for Batching App.

```
 G  272.04 lb
```

Peak Weighing (Format #6)

```
Peak Max   1000.02 lb
```

Remote Display (Format #7)
Active displayed weight value

```
272.04 lb G
```

Print Totals (Format #8)
Default for Accumulator App.

```
Transaction Count:   10
Gross Total  272.04 lb
 Tare Total   95.88 lb
  Net Total  176.16 lb
```

Print Totals (Format #9)
Default for Counting App.

```
Transaction Count:   10
Count Total  176
```

Create your own (Format #10)

The indicator can be configured for many other outputs to match the application.

6 Error messages

The following error messages may be displayed during use of the indicator:

Message	Display
Overload	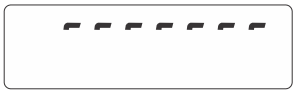
Can't fit on display	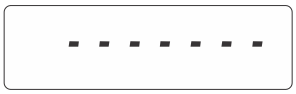
Underload	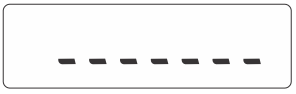
Can't	
Entry not in valid range	
Password entry failed	
Remote display not receiving data from the master indicator	
Indicator did not reach a stable zero weight within time window set for automated weighing process.	  

7 String index/character data entry

In the User menu there is an entry, Site ID, that requires you to enter text in a seven digit string. Below are guidelines to create or edit text in this string. This is a sample of a string entry display.

When these segments are flashing, you are in the string index select mode. In this mode you select the index character you want to edit or add/delete a character.



String Index number

Character (ASCII characters are entered as decimal values)

Left-flashing bar graph segments indicate you are in the String Index select mode. Use the Table 1 key legend to:

- move to the index number you want to edit
- add a new index number
- delete an existing index number.

	Table 1: Key Action When In The String Index Select Mode					
Action	**TARE**	**SELECT**	**ZERO**	**PRINT**	**UNITS**	**F1**
Momentary Key Press	Does nothing	Selects the index character for editing using the key actions in Table 2	EXIT	Moves left one position in the index	Moves right one position in the index	ESC/Abort
Long Key Press	Deletes current character	Append new character after this point Default character added is 32 (space)	Does nothing	Page Up (Decrements index by 10)	Page Down (Increments index by 10)	Does nothing

After you select the index number, use the Table 2 key actions to edit the character for that index number.

	Table 2: Key Action When In The Character Edit Mode					
Action	**TARE**	**SELECT**	**ZERO**	**PRINT**	**UNITS**	**F1**
Single Key Press	Increments the flashing digit by 1	Decrements the flashing digit by 1	Enter	Delete flashing digit	Add Digit	ESC/Abort
Long Key Press	Move flashing digit left	Move flashing digit right	Does nothing	Delete the entire entry	Does nothing	Does nothing

8 Supervisor menu

This menu allows a supervisor to change those functions of an application that are configurable. Access the supervisor menu using the password 1793. Refer to *Accessing the menus on page 25* for instructions.



Wherever there is an option to print information in the any of the supervisor's menus, the information will print out of Port 1 or Port 2, whichever is configured.



The menus are always explained in a sequential manner to cover all information in a logical fashion. You will probably never access all the menu items in this manner. You can navigate to the area of the menu that needs to be changed by using the navigation key chart shown with the menus.

The Supervisor menu changes based on the active application. Go to the appropriate section.

- *General Weighing application supervisor menu on page 40*
- *Accumulator application supervisor menu on page 45*
- *Counting application supervisor menu on page 48*
- *Checkweighing application supervisor menu on page 51*
- *Batching application supervisor menu on page 54*
- *Peak Hold application supervisor menu on page 57*
- *Remote Display application supervisor menu on page 59*



Use the Numeric entry procedure on page 11 when you need to enter values.

8.1 General Weighing application supervisor menu

Figure 8.1 shows the Supervisor menu when you are in the General Weighing application.

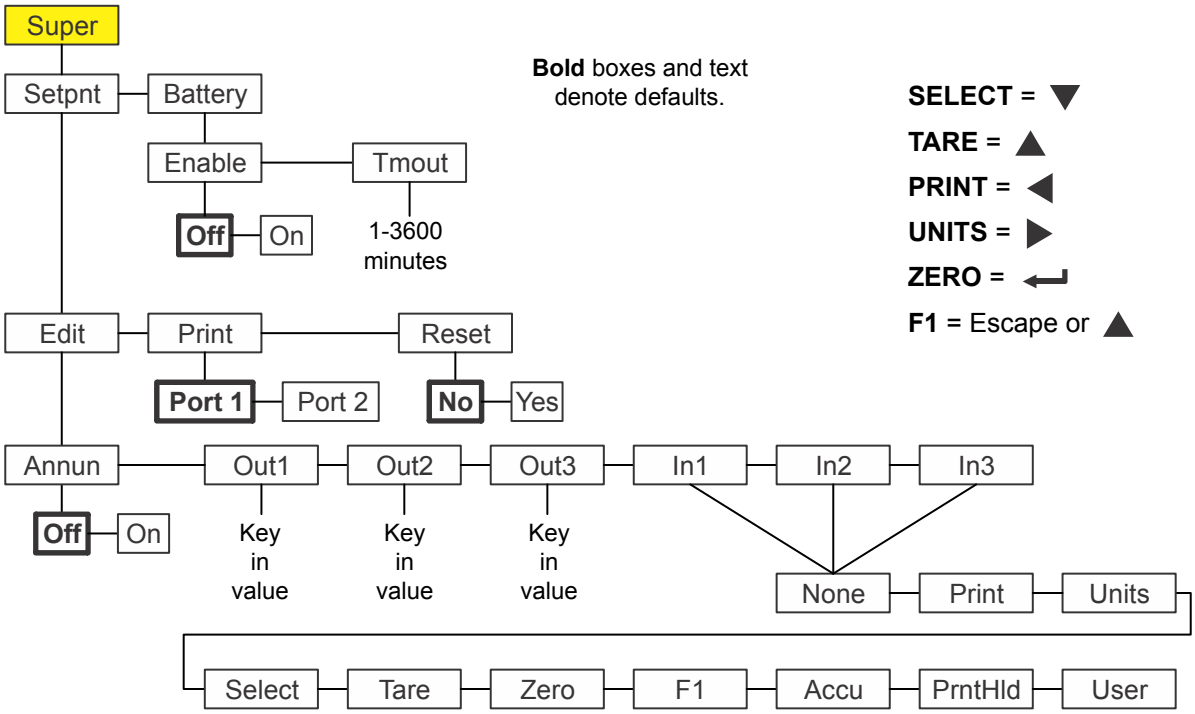

Figure 8.1 Supervisor menu for the General Weighing application



The Setpoint menu is the same for all the applications so will only be explained once here. Exceptions are noted in the text.

Follow these steps to set the items in the Supervisor menu.

8.1.1 Setpoint

Super↓ Setpoint



*The ↓ and → symbols used in this section stand for direction moved in the menu. So Super ↓ Setpoint, shown above, illustrates that you move down from **SuPEr** to **SEtPnt**. This will help you keep track of where you are in the menu structure.*



A setpoint value can be entered up to scale capacity.

Turn off or disable any setpoints you are not using. See the Service manual for information on disabling or turning off setpoints.

1. With the General Weighing application active, access the Supervisor menu. Refer to *Accessing the menus on page 25* for instructions. From ***SuPEr***, press **SELECT** …

   SEtPnt is displayed. Use this to:

   - set the function of the setpoint annunciators
   - enter up to three setpoint values
   - select inputs for up to three inputs
   - print the setpoint settings
   - reset all setpoint settings to factory defaults.

Annunciators

Setpoint ↓ Edit ↓ Annun

2. From ***SEtPnt***, press **SELECT** …

   Edit is displayed.

3. Press **SELECT** …

   Annun is displayed. (***Annun*** is not included in the Batch application Supervisor menu. Skip steps 3 through 5).

   This stands for annunciators, referring to the *SP1*, *SP2* and *SP3* setpoint annunciators. By default (***oFF***) these annunciators are ON when the displayed weight is below the setpoint value or OFF above the setpoint value. If you select ***on***, the annunciators work in the opposite fashion--OFF when below, ON when above.

4. Press **SELECT** …

   The current setting is displayed (***oFF*** or ***on***).

5. Press **UNITS** to toggle between the choices and when your choice is displayed, press **ZERO** to accept …

   Annun is displayed.

Outputs

Setpoint ↓ Edit ↓ Annun → Out

6. Press **UNITS** …

   out1 is displayed. This is the weight value for setpoint 1.

7. Press **SELECT** …

   The current value is displayed with a flashing right digit.

8. Press **ZERO** to accept the displayed value or key in a new value and press **ZERO** to accept …

   out1 is displayed.

9. Press **UNITS** …

   out2 is displayed.

Inputs

Setpoint ↓ Edit ↓ Annun → Out → In

10. Repeat steps 7 through 9 for ***out2*** and ***out3***. Press **UNITS** when finished …

    in1 is displayed. This stands for input 1. Use this to assign a function to input 1 when an external switch is tripped. Default choice is ***nonE***. The choices are listed in Figure 8.1.



*The remote input can be used to perform an accumulated print total function. Use the **PrintHoLd** function to simulate a "press and hold" of the **PRINT** key. If you are using a momentary switch, press and release. If you are using a toggle switch, switch it ON then OFF to reset the function for the next time.*



Inputs and Outputs must be enabled ON in a separate password protected menu. Some input choices will not apply in the application that is active.

11. From ***in1***, press **SELECT** …

    The current choice is displayed.

12. Press **UNITS** to scroll through the choices and when your choice is displayed, press **ZERO** to accept …

    in1 is displayed.

13. Press **UNITS** …

    in2 is displayed.

14. Repeat steps 11 through 13 for ***in2*** and ***in3***. Press **TARE** when finished …

    Edit is displayed.

Print

Setpoint ↓ Edit → Print

15. Press **UNITS** …

    Print is displayed. Use this to print the settings under ***SEtPnt***.

16. Press **SELECT** …

    Port 1 is displayed.

17. Press **F1** to abort the print process or press **UNITS** to scroll to the desired port and press **ZERO** to print the information …

    Print is displayed after either action.

Reset

Setpoint ↓ Edit → Print → Reset

18. Press **UNITS** …

    rESEt is displayed. Use this to reset the settings under ***Edit*** to factory defaults.

19. Press **SELECT** …

    no is displayed.

20. Press **ZERO** to abort the reset or press **UNITS** …

    YES is displayed.

21. Press **ZERO** to reset the settings to factory defaults …

    rESEt is displayed.

22. Press **TARE** …

    SEtPnt is displayed.

8.1.2 Battery

Super ↓ Setpoint → Battery



The battery status and timeout features are for the internal battery option and do not function with other battery sources.

1. Press **UNITS** …

   bAttErY is displayed. Use this to enable the battery and to set a timeout length (in minutes). If this time expires with no scale or keypad activity the indicator will automatically shut off.

Enable

Battery ↓ Enable



*Only enable the battery and set the **tMout** value if using the internal T401S battery option. The shut off timer will not work with other external battery sources.*

2. Press **SELECT** …

   EnAbLE is displayed. Choices are ***oFF*** and ***on***. Choose ***oFF*** to disable battery usage. Choose ***on*** to enable battery usage.

3. Press **UNITS** to toggle between the choices and when your choice is displayed, press **ZERO** to accept …

   EnAbLE is displayed.

Timeout

Battery ↓ Enable → Timeout

4. Press **UNITS** …

   tMout is displayed. This stands for timeout. Use this to set the length of time before inactivity of the scale and keypad cause battery power to be shutoff. Values between 1 and 3600 minutes are valid.

5. Press **SELECT** …

   A numeric entry screen appears.

6. Key in a value, in minutes and press **ZERO** to accept …

   tMout is displayed.

7. This completes the Supervisor menu for General Weighing. Repeatedly press **TARE** until the indicator returns to normal weighing mode.



The changes are saved automatically and the indicator reboots.

The current weight value is displayed.

8.2 Accumulator application supervisor menu

Figure 8.2 shows the Supervisor menu when you are in the Accumulator application:

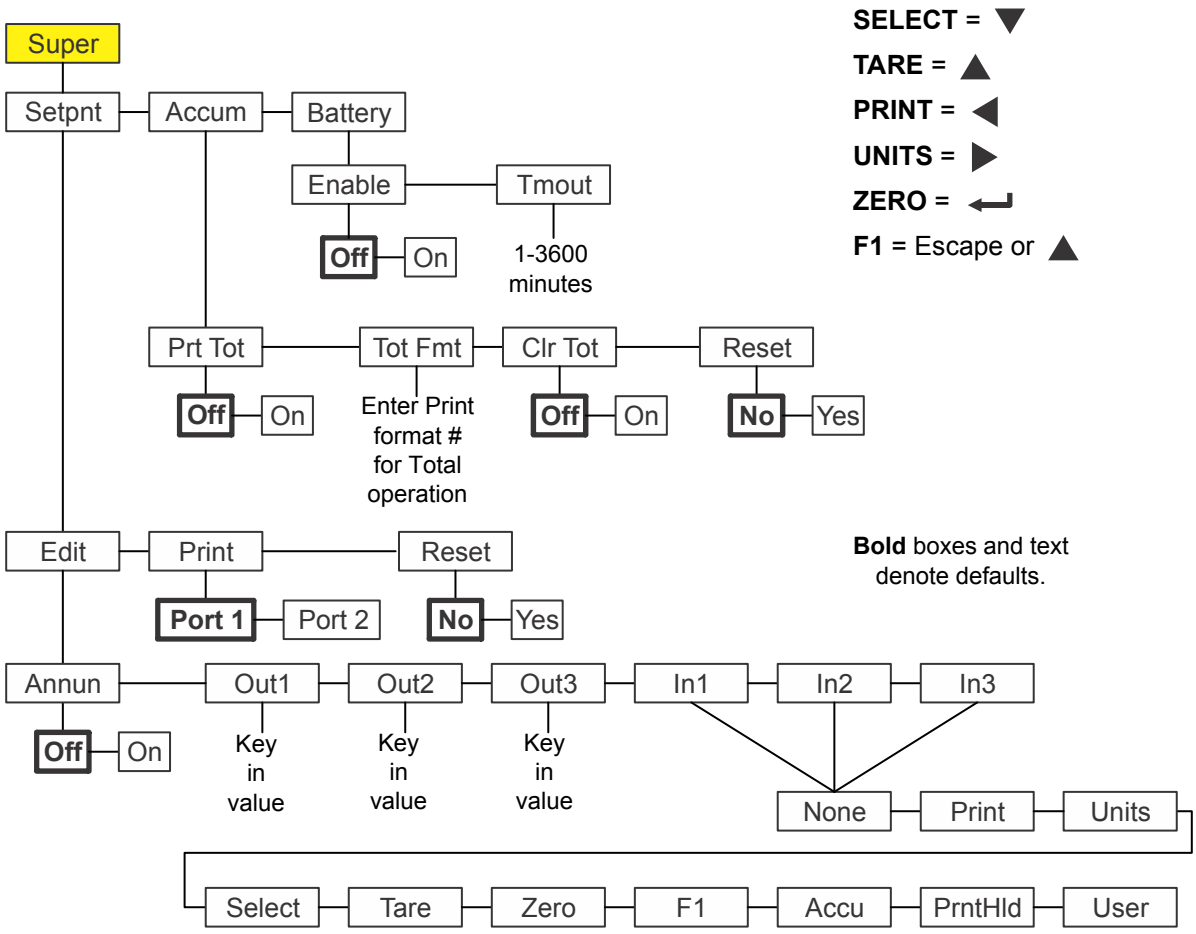

Figure 8.2 Supervisor menu for the Accumulator application

Follow these steps to set the items in the Supervisor menu.

*The **Setpnt** and **bAttErY** submenus in Figure 8.2 are the same as described in General Weighing application supervisor menu on page 40. Go there for information on those submenus. The unique submenus to this application are described below.*

8.2.1 Accumulator

Super ↓ Setpoint → Accum

1. With the Accumulator application active, access the Supervisor menu using password 1793. Refer to *Accessing the menus on page 25* for instructions. From ***SuPEr***, press **SELECT** …

   SEtPnt is displayed.

2. Press **UNITS** …

   AccuM is displayed. Use this to set the items relating to accumulation. Under ***AccuM*** you can do the following:

   - Enable/Disable the ability to print the accumulated total (***Prt tot***).
   - Key in a print format number for printing the total accumulated weight information (***tot FMt***).
   - Enable/Disable the ability to clear the total accumulation information when the total is printed (***clr tot***).
   - Reset the accumulator memory channel value to 0 (***rESEt***).

   The following steps describe the procedure to set these items.

Print total

Accum ↓ Print Total

3. From **AccuM**, press **SELECT** …

   Prt tot is displayed. This stands for print total.

4. Press **SELECT** …

   oFF is displayed.

5. Press **ZERO** to keep the print total function disabled or press **UNITS** to toggle to ***on*** and press **ZERO** to enable printing of the accumulated total …

   Prt tot is displayed.

   If enabled, during normal operation the user can press and hold **PRINT** for three seconds and the selected total print format (see step 8) will be sent out any port that is set up to printed. The display will flash ***Prn-tot***.

Total format

Accum ↓ Print Total → Total Format

6. Press **UNITS** …

   tot FMt is displayed. This stands for the total print format.

7. Press **SELECT** …

   The current print format number is displayed with a flashing right-most digit. (Default is format 8)

8. Press **ZERO** to accept the existing setting or key in a new format number and press **ZERO** …

   tot FMt is displayed.

Clear total

Accum ↓ Print Total → Total Format → Clear Total

9. Press **UNITS** …

   cLr tot is displayed. This stands for clear total. Choose ***on*** to enable clearing the accumulated total when printed. Choose ***oFF*** to disable this function.

   If enabled, the total is cleared if the user presses and holds the **PRINT** key for three seconds. The message ***cLr-tot*** will flash. The total is printed prior to clearing if this was enabled in step 5 above.

10. Press **SELECT** …

    The current setting is displayed.

11. Press **UNITS** to toggle between the choices and when your choice is displayed, press **ZERO** to accept …

    cLr tot is displayed.

Reset

Accum ↓ Print Total → Total Format → Clear Total → Reset

12. Press **UNITS** …

    rESEt is displayed. Use this to reset the all the items under ***AccuM*** to the factory defaults.

13. Press **SELECT** …

    no is displayed.

14. Press **ZERO** to abort the reset or press **UNITS** …

    YES is displayed.

15. Press **ZERO** to reset the settings to factory defaults …

    rESEt is displayed.

16. Press **TARE** …

    AccuM is displayed.

17. Press **UNITS** …

    bAttErY is displayed. The battery menu is identical in all the applications. Refer to step 1 on page 43 for information on setting up the battery.

18. This completes the Supervisor menu for the Accumulation application. Repeatedly press **TARE** until the indicator returns to normal weighing mode.

    The current weight value is displayed.

8.3 Counting application supervisor menu

Figure 8.3 shows the Supervisor menu when you are in the Counting application:

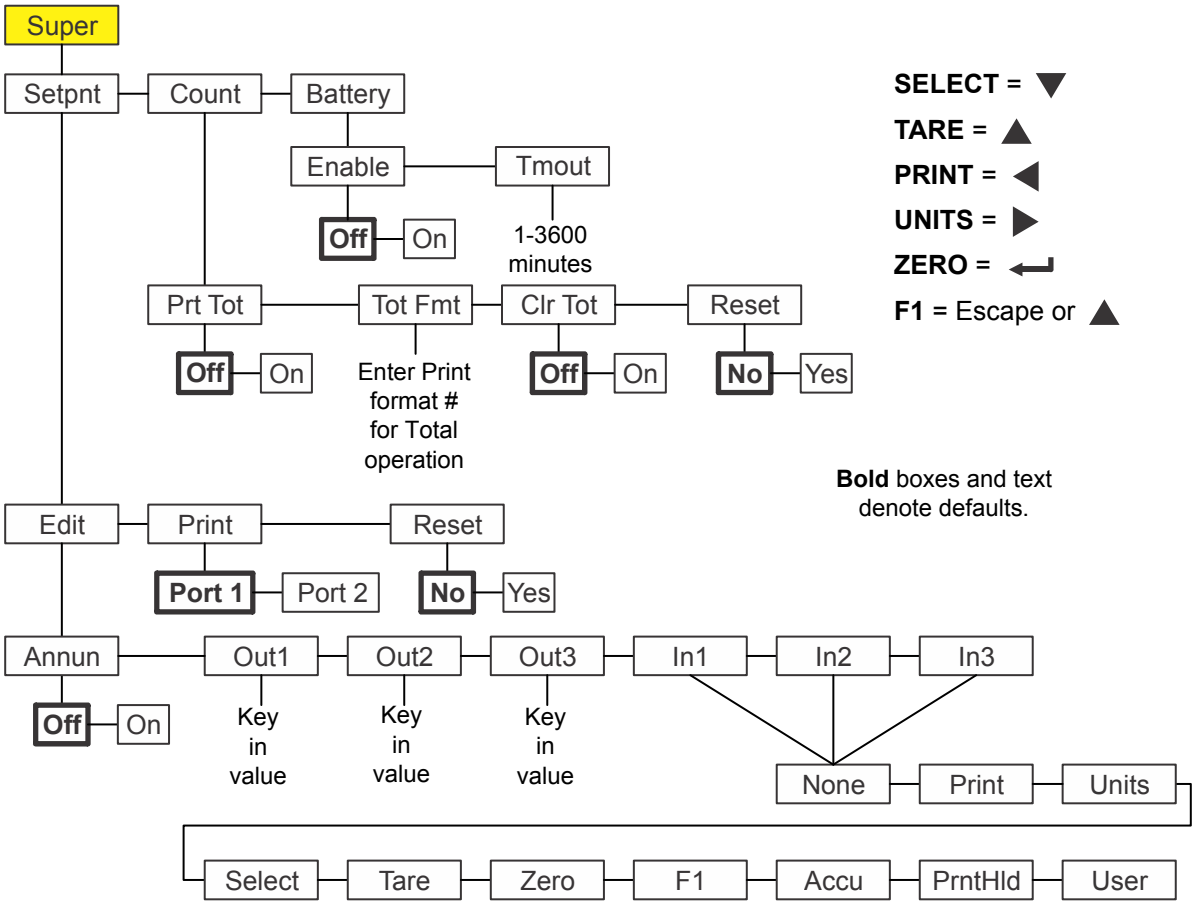

Figure 8.3 Supervisor menu for the Count application

Follow these steps to set the items in the Supervisor menu.

*The **Setpnt** and **bAttErY** submenus in Figure 8.3 are the same as described in General Weighing application supervisor menu on page 40. Go there for information on those submenus. The unique submenus to this application are described below.*

*The **cnt Acc** submenu is the same described in the **Accum** submenu in the Accumulator application. Refer to step 3 on page 46.*

8.3.1 Count

Super ↓ Setpoint → Count

1. With the Count application active, access the Supervisor menu using password 1793. Refer to *Accessing the menus on page 25* for instructions. From ***SuPEr***, press **SELECT** …

   SEtPnt is displayed.

2. Press **UNITS** …

   count is displayed. Use this to set the items relating to counting:

   - Enable/Disable the ability to print the accumulated total (***Prt tot***).
   - Key in a print format number for printing the total accumulated information (***tot FMt***).
   - Enable/Disable the ability to clear the total accumulation information when the total is printed (***clr tot***).
   - Reset the accumulator memory channel value to 0 (***rESEt***).

   The following steps describe the procedure to set these items.

Print total

Count ↓ Print Total

3. From ***count***, press **SELECT** …

   Prt tot is displayed. This stands for print total.

4. Press **SELECT** …

   oFF is displayed.

5. Press **ZERO** to keep the print total function disabled or press **UNITS** to toggle to ***on*** and press **ZERO** to enable printing of the accumulated total …

   Prt tot is displayed.

   If enabled, during normal operation the user can press and hold **PRINT** for three seconds and the selected total print format (see step 8 below) will be sent out any port that is set up to print. The display will flash ***Prn-tot***.

Total format

Count ↓ Print Total → Total Format

6. Press **UNITS** …

   tot FMt is displayed. This stands for the total print format.

7. Press **SELECT** …

   The current print format number is displayed with a flashing right-most digit. (Default is format 8)

8. Press **ZERO** to accept the existing setting or key in a new format number and press **ZERO** …

   tot FMt is displayed.

Clear total

Count ↓ Print Total → Total Format → Clear Total

9. Press **UNITS** …

   cLr tot is displayed. This stands for clear total. Choose ***on*** to enable clearing the accumulated total when printed. Choose ***oFF*** to disable this function.

   If enabled, the total is cleared if the user presses and holds the **PRINT** key for three seconds. The message ***cLr-tot*** will flash. The total is printed prior to clearing if this was enabled in step 5 above.

10. Press **SELECT** …

    The current setting is displayed.

11. Press **UNITS** to toggle between the choices and when your choice is displayed, press **ZERO** to accept …

    cLr tot is displayed.

Reset

Accum ↓ Print Total → Total Format → Clear Total → Reset

12. Press **UNITS** …

    rESEt is displayed. Use this to reset the all the items under ***count*** to the factory defaults.

13. Press **SELECT** …

    no is displayed.

14. Press **ZERO** to abort the reset or press **UNITS** …

    YES is displayed.

15. Press **ZERO** to reset the settings to factory defaults …

    rESEt is displayed.

16. Press **TARE** …

    count is displayed.

17. Press **UNITS** …

    bAttErY is displayed. The battery menu is identical in all the applications. Refer to step 1 on page 43 for information on setting up the battery.

18. This completes the Supervisor menu for the Accumulation application. Repeatedly press **TARE** until the indicator returns to normal weighing mode.

    The current weight value is displayed.

8.4 Checkweighing application supervisor menu

Figure 8.4 shows the Supervisor menu when you are in the Checkweighing application:

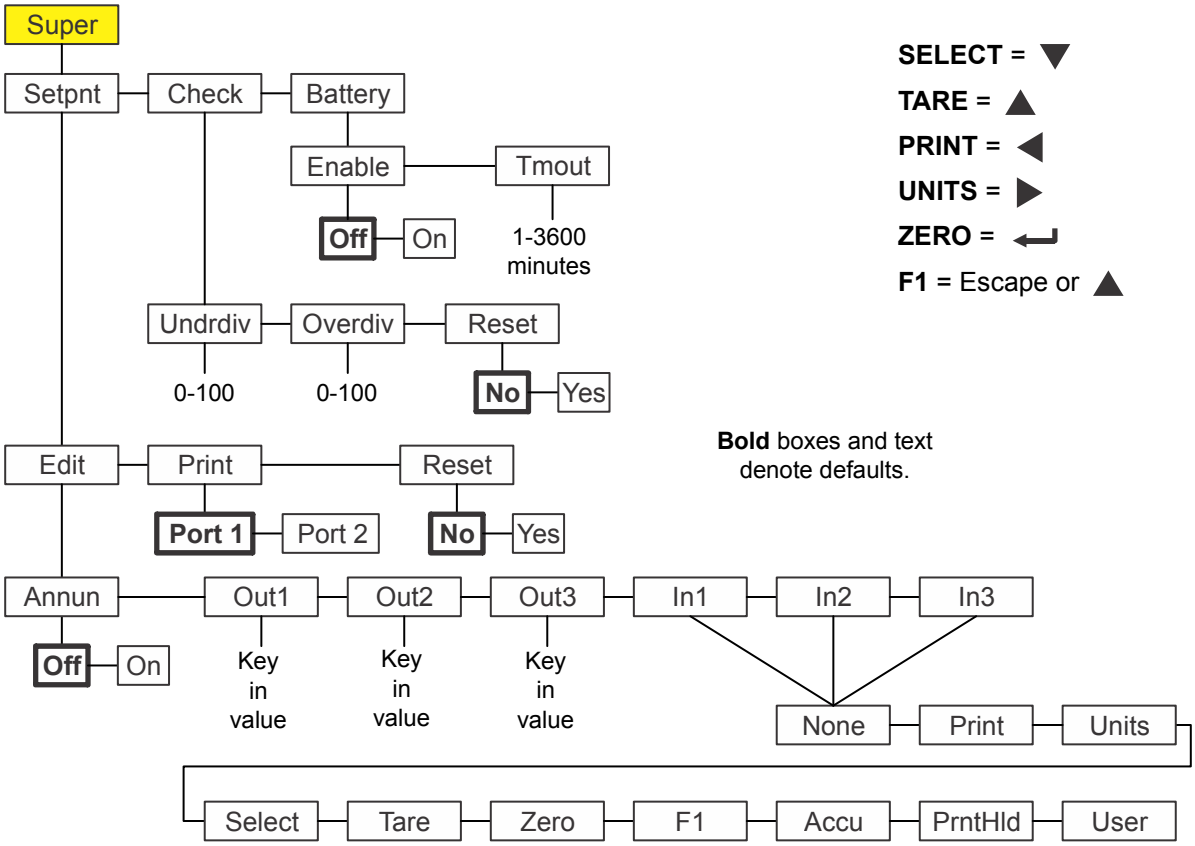

Figure 8.4 Supervisor menu for the Checkweighing application

Follow these steps to set the items in the Supervisor menu.

*The **Setpnt** and **bAttErY** submenus in Figure 8.4 are the same as described in General Weighing application supervisor menu on page 40. Go there for information on those submenus. The unique submenus to this application are described below.*

8.4.1 Check

Super ↓ Setpoint → Check

1. With the Checkweighing application active, access the Supervisor menu using password 1793. Refer to *Accessing the menus on page 25* for instructions. From ***SuPEr***, press **SELECT** …

   SEtPnt is displayed.

2. Press **UNITS** …

   chEcK is displayed. This stands for checkweigher. Use this to set the items relating to checkweighing:

   - Set under divisions for acceptable target weight (***undrdiv***)

- Set over divisions for acceptable target weight (***oVErdiV***)
- Reset the target values to zero.(***rESEt***)



The checkweigher uses the Latch method for outputs. This means that the weight has to stabilize before the annunciator and output for the appropriate condition (Under, Accept or Over) are activated.

In latch mode, once activated the annunciator and output will remain unchanged until the item is removed and the gross weight returns to inside the gross zero band.

Under divisions

Check ↓ Under divisions



*If you are keying in the upper/lower limit as the method for setting a target weight, the **undrdiv** and **oVErdiV** parameters do not affect the checkweighing process. They only work for setting the acceptable range in the target weight method. See Weighing a target object on page 19.*

3. Press **SELECT** …

   undrdiv is displayed. Use this to set the number of divisions (0-100) below the target weight that is still within the accept window.

4. Press **SELECT** …

   The current value is shown with a flashing right-most digit.

5. Press **ZERO** to accept the current value or key in a new value and press **ZERO** to accept …

   undrdiv is displayed.

Over divisions

Check ↓ Under divisions → Over divisions

6. Press **UNITS** …

   oVErdiV is displayed. Use this to set the number of divisions (0-100) above the target weight that is still within the accept window.

7. Press **SELECT** …

   The current value is shown with a flashing right-most digit.

8. Press **ZERO** to accept the current value or key in a new value and press **ZERO** to accept …

   oVErdiV is displayed.

Reset

Check ↓ Under divisions → Over divisions → Reset

9. Press **UNITS** …

   rESEt is displayed. Use this to reset the all the checkweigher variables to the factory defaults.

10. Press **SELECT** …

    no is displayed.

11. Press **ZERO** to abort the reset or press **UNITS** …

    YES is displayed.

12. Press **ZERO** to reset the settings to factory defaults …

    rESEt is displayed.

13. Press **TARE** …

    chEcK is displayed.

14. Press **UNITS** …

    bAttErY is displayed. The battery menu is identical in all the applications. Refer to step 1 on page 43 for information on setting up the battery.

15. This completes the Supervisor menu for the Checkweighing application. Repeatedly press **TARE** until the indicator returns to normal weighing mode.

    The current weight value is displayed.

8.5 Batching application supervisor menu

Figure 8.5 shows the Supervisor menu when you are in the Batching application:

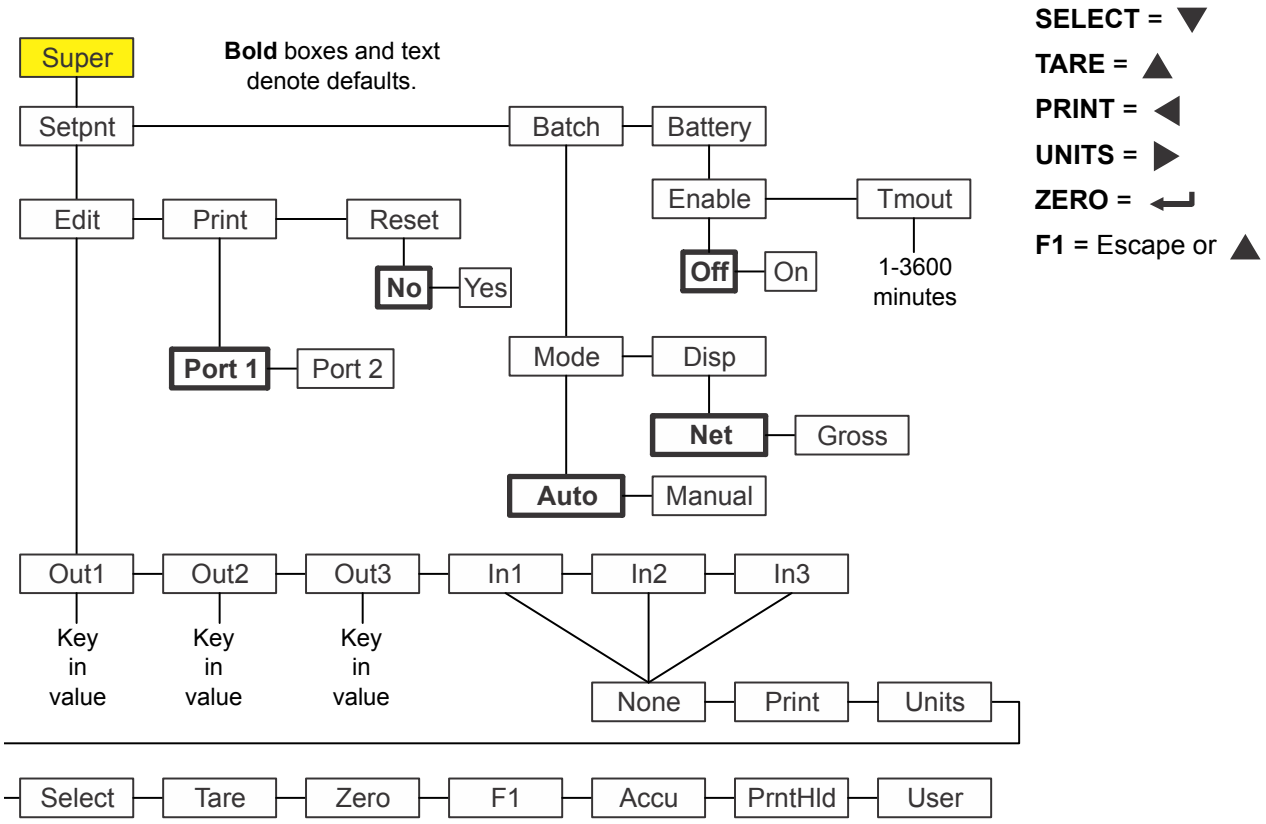

Figure 8.5 Supervisor menu for the Batching application

Follow these steps to set the items in the Supervisor menu.



*The **Setpnt** and **bAttErY** submenus in Figure 8.5 are the same as described in General Weighing application supervisor menu on page 40. Go there for information on those submenus. The unique submenus to this application are described below.*

8.5.1 Batch

Super ↓ Setpoint → Batch

1. With the Batching application active, access the Supervisor menu using password 1793. Refer to *Accessing the menus on page 25* for instructions. From ***SuPEr***, press **SELECT** …

   SEtPnt is displayed.

2. Press **UNITS** …

   bAtch is displayed. Use this to set the items relating to batching:

   - Select auto or manual operation. (***ModE***)
   - Set gross or net display mode. (***diSP***)

See *Notes on batching on page 56* for information about settings for batching.

Mode

Batch ↓ Mode

3. Press **SELECT** …

   ModE is displayed. Mode has two choices: ***Auto*** or ***MAnuAL***. There is a detailed description for each type in the section titled *Batching application on page 21*

4. Press **SELECT** …

   The current setting is displayed.

5. Press **UNITS** to toggle between the choices and when your choice is displayed, press **ZERO** to accept …

   ModE is displayed.

Display

Batch ↓ Mode → Display

6. Press **UNITS** …

   diSP is displayed. Display has two choices: ***NEt*** or ***GroSS***. Each is explained below:

   NEt Choose Net to base batching on net weights.

   GroSS Choose Gross to base batching on gross weights.

7. Press **SELECT** …

   The current setting is displayed.

8. Press **UNITS** to toggle between the choices and when your choice is displayed, press **ZERO** to accept …

   diSP is displayed.

8.5.2 Notes on batching

If ***MODE*** is set to ***AUTO***, the batch process will continue until the final ingredient is completed. Between each ingredient there will be a slight delay to allow for motion and final weight.

If ***MODE*** is set to ***MANUAL***, this requires that you press **F1** between each ingredient to complete the fill cycle.

If ***DISP*** is set to ***NET***, an autotare will occur prior to each ingredient and the Out 1, 2 and 3 fill weights will be based on Net weight.

If ***DISP*** is set to ***GROSS***, no autotare will occur and the Out 1, 2 and 3 fill weights would be based on the Gross weight of the accumulated ingredients. If Ingredient 1 amount is 10, Ingredient 2 amount is 20 and ingredient 3 amount is 30 then you would enter Out 1 = 10, Out 2 = 30 (10 + 20) and Out 3 = 60 (10 + 20 + 30). Output setpoints are based on the actual displayed Gross weight so if inaccurate amounts of ingredient are experienced during the batch then it may affect the amount of each subsequent ingredient that is added.

8.6 Peak Hold application supervisor menu

Figure 8.6 shows the Supervisor menu when you are in the Peak Hold application:

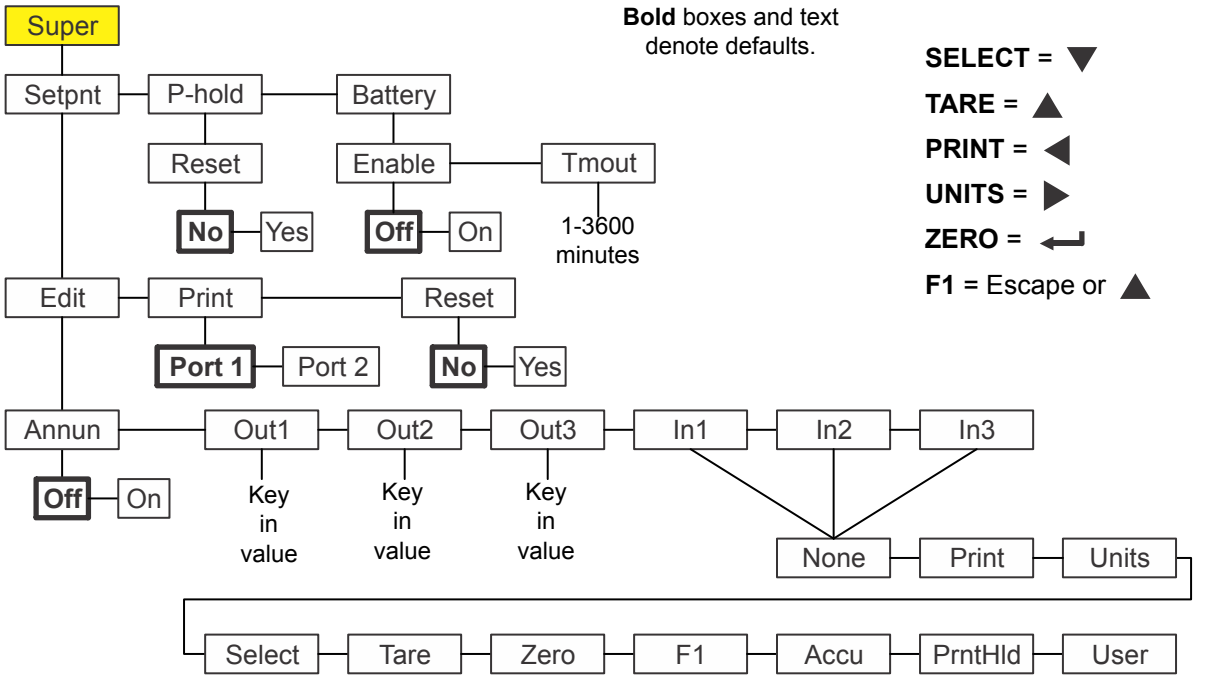

Figure 8.6 Supervisor menu for the Peak Hold application

*The **Setpnt** and **bAttErY** submenus in Figure 8.6 are the same as described in General Weighing application supervisor menu on page 40. Go there for information on those submenus. The unique submenus to this application are described below.*

8.6.1 Peak hold

Super ↓ Setpoint → P-hold

1. With the Peak Hold application active, access the Supervisor menu using password 1793. Refer to *Accessing the menus on page 25* for instructions. From ***SuPEr***, press **SELECT** …

   SEtPnt is displayed.

2. Press **UNITS** …

   P-hoLd is displayed. Use this to reset the max peak value. If the **F1** key is disabled, which is the normal key to reset peak value, the supervisor needs an alternate method to reset these values.

Reset

P-hold ↓ Reset

3. Press **SELECT** …

   rESEt is displayed.

4. Press **SELECT** …

   no is displayed.

5. Press **UNITS** to toggle between the ***no*** and ***YES*** choices. Press **ZERO** to accept…

   If you chose ***YES***, the max peak value is reset to the current gross weight and ***rESEt*** is displayed.

6. Press **TARE** repeatedly to exit and save changes.

8.7 Remote Display application supervisor menu

To configure the indicator for remote display operation you must choose the mode of operation in the supervisor menu and configure the port. Configuring the port is done through a password protected menu. Contact your supervisor or your local representative for more information.

Figure 8.7 shows the Supervisor menu when you are in the Remote Display application:

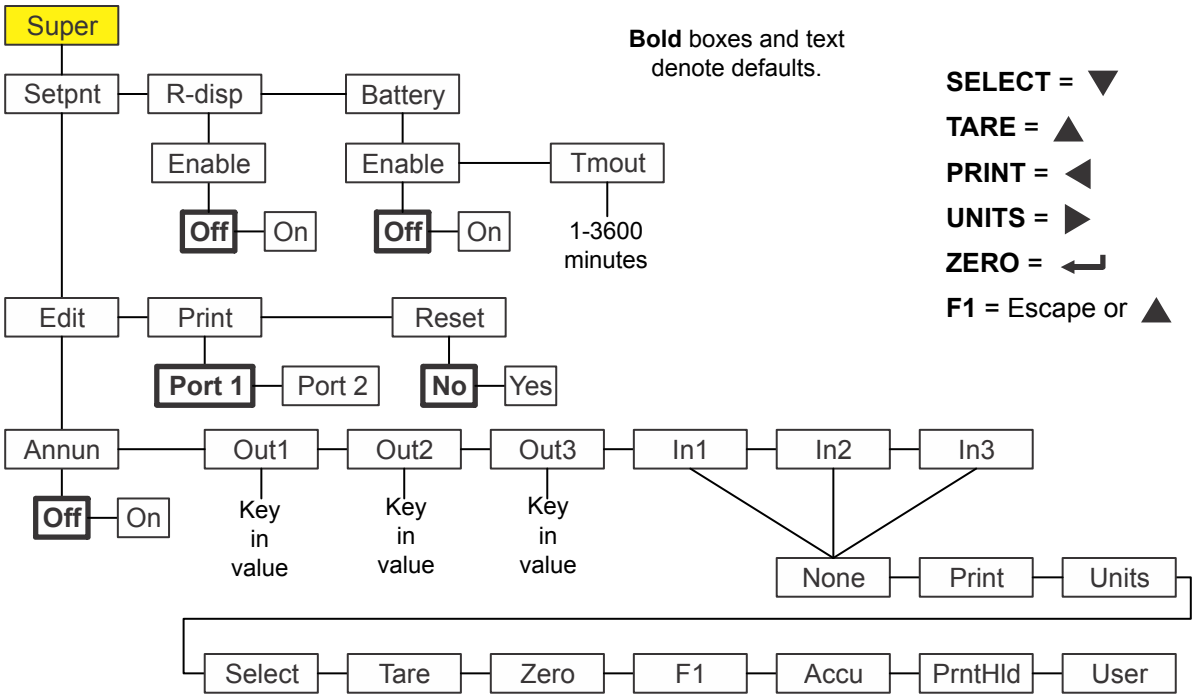

Figure 8.7 Supervisor menu for the Remote Display application

*The **Setpnt** and **bAttErY** submenus in Figure 8.7 are the same as described in General Weighing application supervisor menu on page 40. Go there for information on those submenus. The unique submenu to this application is described below.*

1. With ***r-diSP*** displayed press **SELECT** …

   EnAbLE is displayed. Use this to enable or disable the remote display function. Choices are ***OFF*** (disable) or ***on*** (enable).

2. Press **SELECT** …

   The current setting is displayed.

3. Press **UNITS** to toggle between the choices and press **ZERO** to accept the displayed choice …

   EnAbLE is displayed.

4. Press **TARE** …

   r-diSP is displayed.

Settings in two password protected menus must be made to configure the indicator for remote display operation. Contact your local representative for information on setting up the indicator as a Primary or Secondary indicator.



B-TEK Scale LLC
1510 Metric Ave. SW
Canton, OH 44706-3088